the PROFESSIONAL series

SERIES NZ B2: KEY-LOCK® CONCEALED CEILING SYSTEMS

V1

RONDO®

CONTENTS

B2.1 INTRODUCTION 3

B2.2 COMPONENTS 4

B2.3 PRODUCT DATA 8

B2.4 KEY-LOCK® SUSPENDED CEILING SYSTEMS 12
- B2.4.1 Vented Ceilings 12
- B2.4.2 Pressure Resisting Key-Lock Ceiling 26
- B2.4.3 Standard Details 45
- B2.4.4 Installation 54
- B2.4.5 Additional Details 65

B2.5 KEY-LOCK® DIRECT FIXED CEILING SYSTEMS 72
- B2.5.1 Furring Channel Direct Fixed Ceilings 72
- B2.5.2 Top Cross Rail Direct Fix Ceilings 91

B2.6 KEY-LOCK® RESIDENTIAL CEILING SYSTEMS 108
- B2.6.1 Direct Fix Bracket/Clip Selection 109
- B2.6.2 Design Data 111
- B2.6.3 Batten Direct Fix 112
- B2.6.4 Standard Details 112
- B2.6.5 Installation 115

Please note: This technical literature has been produced to be used STRICTLY and SPECIFICALLY with genuine Rondo products. Calculations and recommendations in this literature are based on detailed testing, tolerances, and performance of Rondo Steel products. The use of this guide with non- Rondo products is NOT recommended due to a high risk of non-compliant design and installation outcomes.

We want you to know that we've rallied the best, and most experienced experts at Rondo to produce this book so that we can offer professionals like yourself a detailed technical reference to use.

Despite our efforts however, products, systems and Building Codes do change over time, and interpretations may also vary, which means we cannot accept any liability for any of the information (or lack of information) in this manual, or any consequences which happen as a result.

This document is not controlled when printed. We recommend you check that you are referring to the latest edition. You can do this by comparing your book to the one currently available on our website at www.rondo.co.nz.

Finally, and only because we've invested so much pride and resources into producing this information for you, we kindly ask that you help us protect the quality and exclusivity of this book by not reproducing any of our images or information for commercial purposes without our written agreement, as per the copyright laws which apply.

Version 1: First released April 2025

KEY-LOCK® CONCEALED CEILING SYSTEM
B2.1 INTRODUCTION

Whether you're looking to direct-fix or fully suspend your plasterboard ceiling, the Rondo KEY-LOCK® Concealed Suspended Ceiling System is designed to produce high quality framing for a flush or featured finish in internal applications.

The components within the system have been specially designed so that they simply snap together, without mechanical tools being required. This means it's easy to install and speeds up time on site. The KEY-LOCK® System can also be used as a framework to line virtually any existing wall or substrate.

It's Rondo's most popular and superior ceiling system as it can be used for fire-rated systems, bulkheads, seismic and acoustic designs, as well as having the strength to hold multiple layers of plasterboard or other linings.

Top Cross Rail and Furring Channel sections have rolled edges to make them safer to handle and with our state-of-the-art manufacturing processes. We can also produce these profiles in custom lengths or radiused for vaulted and curved ceilings.

Our KEY-LOCK® Ceiling System can also be installed with our Acoustic Mounts to reduce airborne sound and impact sound transmitted between floors, which is particularly important in multi-residential projects.

SUITABLE FOR:

- Flush plasterboard ceilings
- Direct-Fix or Fully Suspended internal applications
- Non-Fire Rated systems
- Fire Rated systems - This to be installed strictly in accordance with the tested system
- Acoustic applications requiring multiple layers of plasterboard. Please refer to Rondo Design services when considering seismic solutions in conjunction with acoustic requirements
- Seismic applications - Project specific seismic solutions can be prepared for the KEY-LOCK® System
- Vented, pressure sealed and non-pressure sealed ceiling applications

SPECIAL FEATURES:

- Can be designed for external wind actions
- Manufactured using BlueScope continuous hot-dipped galvanized steel providing surety for strength and reliability
- Primary and secondary profiles available in custom lengths or radiuses

Seismic requirements vary significantly around the country and across different projects. The details contained in this manual have been provided to cover typical design scenarios likely to be encountered, however are not exhaustive in their consideration.

Where the details herein are not sufficient for your specific project the Rondo Engineering Design Services Team can assist with a project specific design. This should be coordinated through your local Rondo representative.

B2.2 COMPONENTS

TABLE B2.2(A): COMPONENT PART NUMBERS AND DESCRIPTION

TOP CROSS RAILS		
PART No.	DESCRIPTION	BMT
127	25mm(h) x 21mm(w) Top Cross Rail	0.75
127R	25mm(h) x 21mm(w) Radiused Top Cross Rail	0.75
128	38mm(h) x 21mm(w) Top Cross Rail	0.75
128R	38mm(h) x 21mm(w) Radiused Top Cross Rail	0.75


127 / 127R


128 / 128R

FURRING CHANNELS		
129	28mm(h) x 38mm(face) Furring Channel	0.5
155	28mm(h) x 48mm(face) Furring Channel	0.5
308	16mm(h) x 38mm(face) Furring Channel	0.5
308R	16mm(h) x 38mm(face) Radiused Furring Channel	0.5
581	16mm(h) x 60mm(w) Resilient Channel	0.55
605	28mm (h) x 64mm (face) Furring Channel	0.5


129

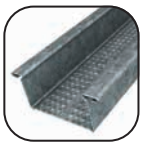
155 / 605

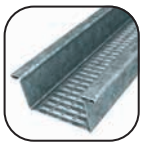
308 / 308R


581

SECTION JOINERS		
138	99mm(l)x51mm(w) Section Joiner - suits 129/308 Furring Channel	-
272	200mm(l)x21mm(w) Section Joiner - suits 125/127/128 Top Cross Rail	-

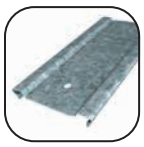
138


272

FURRING CHANNEL/ TOP CROSS RAIL INTERCHANGE CLIP		
119	Rondo U Clip - suits 125/127/128 Top Cross Rail	-
139	Interchange Clip - 129/308 Furring Channel to 125/127/128 Top Cross Rail	-
159	Interchange Clip - 155 Furring Channel to 125/127/128 Top Cross Rail	-
238	Swivel Interchange Clip - 129/308 Furring Channel to 125/127/128 Top Cross Rail	-
609	Interchange Clip - 605 Furring Channel to 127/128 Top Cross Rail	-


119


139


155 / 609


238

WALL TRACKS		
140	28mm(h) x 20mm & 30mm (uneven leg) Wall Track- suits 129/155 Furring Channel.	0.5
141	28mm(h) x 20mm & 30mm (uneven leg) Seismic Wall Track- suits 129/155 Furring Channel.	1.15
142	16mm(h) x 13mm & 28mm (uneven leg) Wall Track- suits 308 Furring Channel	0.5


140 / 141


142

SUSPENSION ROD BRACKETS		
247	60mm(h) x 25mm(w) x 21mm (l) Bracket - 121 Rod to Masonry/Concrete	-
249	60mm(h) x 25mm(w) x 21mm (l) Bracket - 121 Rod to Masonry/Concrete - 9mm Fixing Hole	-
274	80mm(h) x 25mm(w) Bracket - 121 Rod to Timber/Steel	-
534	110mm(h) x 38mm(w) Adjustable Suspension Bracket - 121 Rod to Timber/ Steel	-
547	78mm(h) x 38mm(w) Adjustable Suspension Bracket - 121 Rod to Masonry/Concrete	-

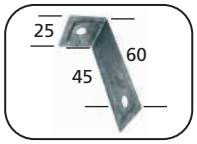

247

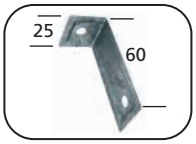

249

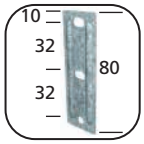

274



534



547

SUSPENSION ROD		
121	ø5.0 mm Soft Galvanised Suspension Rod	-
122	ø5.3 mm Soft Galvanised Suspension Rod - M6 Thread at one end	-
123	ø5.3mm Zinc Plated Soft Steel Rod - M6 threaded full length (65mm, 85mm, 100mm, 120mm, 150mm and 180mm)	-
826	M6 Nut	-


121


122


123


826

SUSPENSION CLIPS		
124	60mm(h) Suspension Clip - suits 125/127/128 Top Cross Rail	-
124N	60mm(h) Suspension Clip with M6 Threaded Nut - suits 125/127/128 Top Cross Rail	-
167	60mm(h) x 29mm (w) Side mounted Suspension Clip - suits 125/127 Top Cross Rail	-
2534	110mm(h) x 38mm(w) Suspension Clip - Suits 125/127/128 Top Cross Rail	-

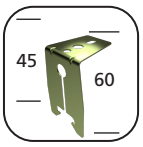

124

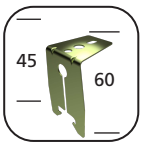

124N



167



2534

DIRECT-FIX CLIPS FOR TOP CROSS RAILS		
166	94mm(h)x37mm(w) DFC - 125/127/128 Top Cross Rail to Timber/Steel	-
124	60mm(h) Suspension Clip - suits 125/127/128 Top Cross Rail	-
124N	60mm(h) Suspension Clip with M6 Threaded Nut - suits 125/127/128 Top Cross Rail	-
A124-C	DFC - 125/127/128 Top Cross Rail to Concrete/Masonary - 6mm Adjustable Anchor Bolt	-
TCR-INFIN090	63mm(h) Adjustable Height Sliding DFC - suits 125/127/128 Top Cross Rail	-


166

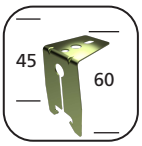

124

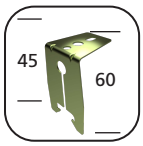

124N


A124-C


TCR-INFIN090

DIRECT-FIX CLIPS FOR FURRING CHANNEL		
156	90mm(h)x76mm(w) DFC - 155 Furring Channel to Timber/Steel	
226	90mm(h)x66mm(w) DFC - 129/308 Furring Channel to Timber/Steel	
394	190mm(h)x66mm(w) DFC - 129/308 Furring Channel to Timber/Steel	

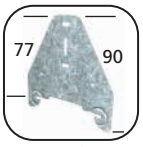

156



226



394

DIRECT-FIX CLIPS FOR FURRING CHANNEL (CONTINUED)		
157	17mm(h)x77mm(w) DFC - 155 Furring Channel to Masonry/Concrete	-
237	17mm(h)x67mm(w) DFC - 129/308 Furring Channel to Masonry/Concrete	-
239	17mm(h)x64mm(w) DFC - 129/308 Furring Channel to Masonry/Concrete - M6 Thread	-
A239-C	DFC 129/308 Furring Channel to Concrete/ Masonry - M6 Adjustable anchor bolt	-
BG01	29mm(h) BETAGRIP Standard DFC - suits 129/308 Furring Channel	-
BG02	49mm(h) BETAGRIP Long DFC - suits 129/308 Furring Channel	-
BG05	64mm(h) BETAFIL Double Membrane Insulation DFC- suits 129/308 Furring Channel	-
BG05K	64mm(h) BETAFIL Semi-Rigid Insulation DFC- suits 129/308 Furring Channel	-
FC-INFIN0030	32mm(h) Sliding Adjustable DFC - suits 129/308 Furring Channel	-
606	90mm (h) x 92mm (w) DFC - 605 Furring Channel to Timber/Steel	-
607	17mm (h) x 93mm (w) DFC - 605 Furring Channel to Masonry/Concrete	-



157

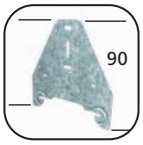

606



237



239


A239-C



BG01



BG02



BG05



BG05K



FC-INFIN0030

WALL TRIMS		
242D	19mm(h) x 9mm(w) x 9mm(h) x 19mm(w) Aluminium Shadowline Column Trim -ø450mm - Tile White	-
242R	19mm(h) x 9mm(w) x 9mm(h) x 19mm(w) Aluminium Shadowline Wall Angle - Radiused - Tile White	-
243D	22(h) x 19mm(w) Aluminium 'L' Column Trim -ø450mm - Tile White	-
243R	22(h) x 19mm(w) Aluminium 'L' Wall Angle - Radiused -Tile White	-


242D


242R


243D


243R

BULKHEAD TRIM		
321	Aluminium Direct Fix Bulkhead Trim for 13mm Plasterboard - Tile White	-


321

PLASTER STOPPING ANGLES		
P25	Plaster Stopping Angle suits 10mm board	0.40
P26	Plaster Stopping Angle suits 13mm board	0.40
P27	Plaster Stopping Angle suits 16mm board	0.40

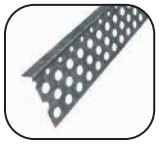
P25/P26/P27

EXPANSION JOINT		
P35	Plasterboard Expansion joint	0.40

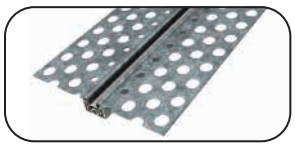

P35

SHADOWLINE PLASTER STOPPING BEADS		
P51	Shadowline Stopping Bead - 10mm Recess for 10mm Board	0.40
P52	Shadowline Stopping Bead - 13mm Recess for 10mm Board	0.40
P53	Shadowline Stopping Bead - 16mm Recess for 10mm Board	0.40

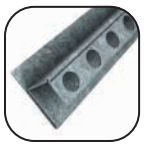

P51/P52/P53

ACCESSORIES		
130	Rod Bending Tool	-
188	45mm(h) x 45mm(w)x16mm(l) Wall Angle Bracket	-
254	82mm(h) x 19mm(w) Spring Adjustable	-
545	74mm(h) x 74mm(w) x 56mm (l) 'L' Bracket	1.50
709	23mm(h) x 15mm(w) x 53mm(l) Joiner - DUO5 Wall Angle	-
717	Bulkhead Clip - For use with DUO5 Wall Angle - suits 13mm Board	-
B005	16mm(h) x 36mm(w) Back Blocking Batten	-



130



188



254



545

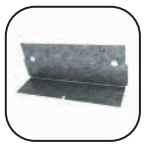

709



717

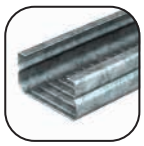

B005

CEILING BATTENS		
310	35mm(h) x 40mm(face) Ceiling Batten	0.55

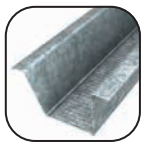

310

DIRECT FIX CLIPS FOR CEILING BATTENS		
311D	92mm(h) x 90mm(w) Dual Purpose DFC - 310 Ceiling Batten to Timber/Steel	-
313	190mm(h) x 90mm(w) Extended DFC - 310 Ceiling Batten to Timber/Steel	-



311D



313

B2.3 PRODUCT DATA

PROPERTIES OF STEEL

Refer to Section A6.3 for the properties of the steel used for the design of the roll formed Rondo KEY-LOCK® Components.

TOP CROSS RAILS

MATERIAL SPECIFICATIONS:

The sections are cold roll formed from zinc coated steel strip, which is manufactured to AS1397.

Steel Grade: G2

Yield Strength: F_y = 270 MPa (typical)

Coating Grade: Z275 -275g/m² zinc

Base Metal Thickness: As specified

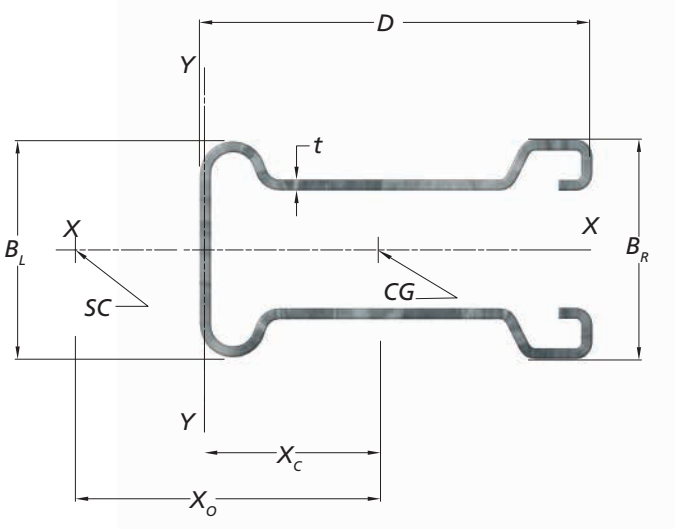

FIGURE 2.3(A): 127/128 TOP CROSS RAIL

TABLE B2.3(A): TOP CROSS RAILS – SECTION PROPERTIES

PART NO	DIMENSIONS				CENTROID		SHEAR CENTRE		MONOSYMETRIC PARAMETER		GROSS AREA	MOMENT OF INERTIA		SECTION MODULUS				TORSION CONSTANT	WARPING CONSTANT	YIELD STRESS	SELF-WEIGHT
	D	B_L	B_R	t	X_C	Y_C	X_O	Y_O	β_x	β_y	A_g	I_{xx}	I_{yy}	Z_{xT}	Z_{xB}	Z_{yL}	Z_{yR}	J	I_w	F_y	S_w
	mm	mm	mm	mm	mm	mm	mm	mm	mm	mm	mm²	mm⁴	mm⁴	mm³	mm³	mm³	mm³	mm⁴	mm⁶	(MPa)	kg/m
127	25.40	20.90	20.86	0.75	10.75	0	-21.48	0	0	46.04	63.17	3581	5011	343.0	343.0	451.0	352.0	11.8	232490	270	0.522
128	38.10	20.90	20.86	0.75	16.96	0	-32.66	0	0	67.61	82.5	4337	14363	416.0	416.0	828.0	693.0	15.5	553470	270	0.681

FURRING CHANNELS

MATERIAL SPECIFICATIONS:

The sections are cold roll formed from zinc coated steel strip, which is manufactured to AS1397.

Steel Grade: G2 or G250

Yield Strength: Fy = 270 MPa

Coating Grade: Z275 -275g/m² zinc

Base Metal Thickness: As specified

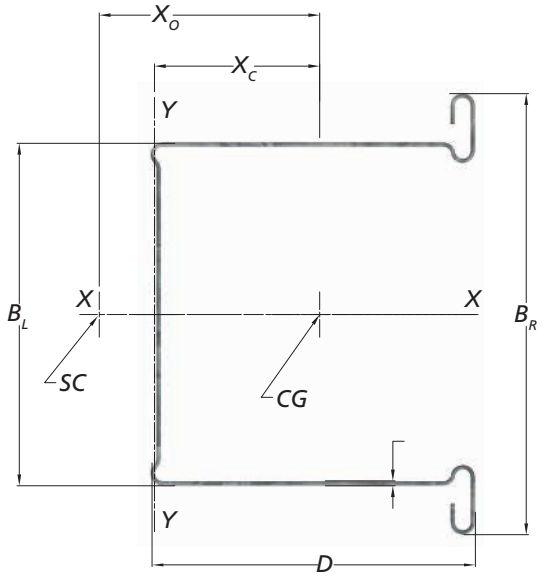

FIGURE 2.3(B): 129/308/155 FURRING CHANNEL

TABLE B2.3(B): FURRING CHANNELS – SECTION PROPERTIES

PART NO	DIMENSIONS				CENTROID		SHEAR CENTRE		MONOSYMETRIC PARAMETER		GROSS AREA	MOMENT OF INERTIA		SECTION MODULUS				TORSION CONSTANT	WARPING CONSTANT	YIELD STRESS	SELF-WEIGHT
	D	B_L	B_R	t	X_C	Y_C	X_O	Y_O	β_x	β_y	A_g	I_{xx}	I_{yy}	Z_{xT}	Z_{xB}	Z_{yL}	Z_{yR}	J	I_w	F_y	S_w
	mm	mm	mm	mm	mm	mm	mm	mm	mm	mm	mm²	mm⁴	mm⁴	mm³	mm³	mm³	mm³	mm⁴	mm⁶	(MPa)	kg/m
129	27.30	37.80	50.60	0.50	12.81	0.00	-25.50	0.00	0.00	61.98	59.54	17580	6776	695	695	519	477	4.946	1469200	270	0.500
155	27.30	47.80	60.60	0.50	11.88	0.00	-24.59	0.00	0.00	67.65	64.55	28734	7447	949	949	616	492	5.380	2448800	270	0.550
308	16.00	37.80	50.60	0.50	7.11	0.00	-13.58	0.00	0.00	47.69	47.26	13055	1804	522.0	522.0	245.0	215.0	3.940	361020	270	0.400

CEILING BATTENS

MATERIAL SPECIFICATIONS:

The sections are cold roll formed from zinc coated steel strip, which is manufactured to AS1397.

Part No's: 310

Steel Grade: G250

Yield Strength: Fy = 270 MPa

Coating Grade: Z275 -275g/m² zinc

Base Metal Thickness: As specified

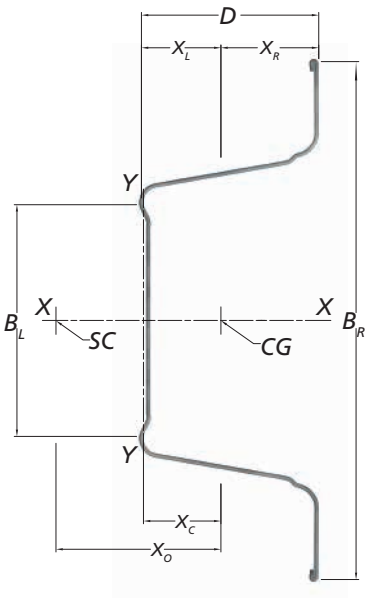

FIGURE 2.3(C): 310 BATTEN

TABLE B2.3(C): CEILING BATTENS – SECTION PROPERTIES

PART NO	DIMENSIONS				CENTROID		SHEAR CENTRE		MONOSYMETRIC PARAMETER		GROSS AREA	MOMENT OF INERTIA		SECTION MODULUS				TORSION CONSTANT	WARPING CONSTANT	YIELD STRESS	Self-Weight
	D	B_L	B_R	t	X_C	Y_C	X_O	Y_O	$ß_x$	$ß_y$	A_g	I_{xx}	I_{yy}	Z_{xT}	Z_{xB}	Z_{yL}	Z_{yR}	J	I_w	F_y	S_w
	mm	mm	mm	mm	mm	mm	mm	mm	mm	mm	mm^2	mm^4	mm^4	mm^3	mm^3	mm^3	mm^3	mm^4	mm^6	(MPa)	kg/m
310	35.00	33.79	72.00	0.55	15.46	0	-28.22	0	0	81.12	71.83	35826	12793	996	996	813	665	7.243	1726400	270	0.600

WALL TRACKS

MATERIAL SPECIFICATIONS:

The sections are cold roll formed from zinc coated steel strip, which is manufactured to AS1397.

Steel Grade: G2 or G250

Yield Strength: F_y = 270 MPa

Coating Grade: Z275 -275g/m^2 zinc

Base Metal Thickness: As specified

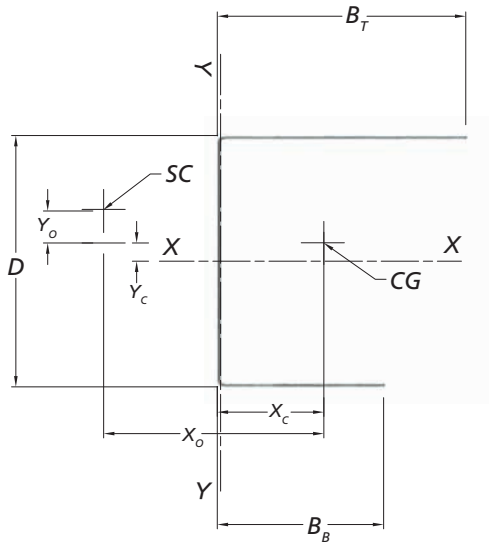

FIGURE 2.3(E): 140/141/142 WALL TRACKS

TABLE B2.3(D): WALL TRACKS – SECTION PROPERTIES

PART NO	DIMENSIONS				CENTROID		SHEAR CENTRE		MONOSYMETRIC PARAMETER		GROSS AREA	MOMENT OF INERTIA		SECTION MODULUS				TORSION CONSTANT	WARPING CONSTANT	YIELD STRESS	Self-Weight
	D	B_L	B_R	t	X_C	Y_C	X_O	Y_O	β_x	β_y	A_g	I_{xx}	I_{yy}	Z_{xT}	Z_{xB}	Z_{yL}	Z_{yR}	J	I_w	F_y	S_w
	mm	mm	mm	mm	mm	mm	mm	mm	mm	mm	mm^2	mm^4	mm^4	mm^3	mm^3	mm^3	mm^3	mm^4	mm^6	(MPa)	kg/m
140	29.10	20.23	30.00	0.50	8.26	1.80	-18.03	2.16	5.57	47.70	38.49	6120	2590	452	352	354	139	3.208	308370	270	0.327
141	30.40	20.91	30.00	1.15	8.26	1.80	-18.30	2.16	5.57	47.70	88.53	14081	5960	1040	809	814	320	39.026	710870	270	0.717
142	17.10	12.73	27.50	0.50	8.07	2.19	-9.46	11.05	-29.56	22.88	27.49	843	2338	215	126	222	96	2.291	30117	270	0.233

SECTION PROPERTIES

In the above Section Properties Tables, the following should be noted:

1. The section properties are calculated for the gross section in accordance with AS/NZS4600, using the accurate method with all elements including flats and bends located on the centreline. Section properties are given for the axis as shown which may be different to the axis required for analysis.
2. Product dimensions (D and B etc) are the nominal sizes based on the total coated thickness (TCT) of the product and are not necessarily the dimensions used to calculate the section properties.
3. Section properties (X_c to I_w) are calculated using base metal thickness (BMT).
4. Section modulus is the minimum value, for both the major and minor axes.
5. Moment of inertia and Section Modulus is about the rectangular axis as applicable.
6. X_c is measured from the centreline of the section indicated.
7. For effective width calculations, the effective section properties are to be calculated in accordance with AS/NZS4600 for the action being considered.

B2.4

KEY-LOCK© SUSPENDED CEILING SYSTEMS

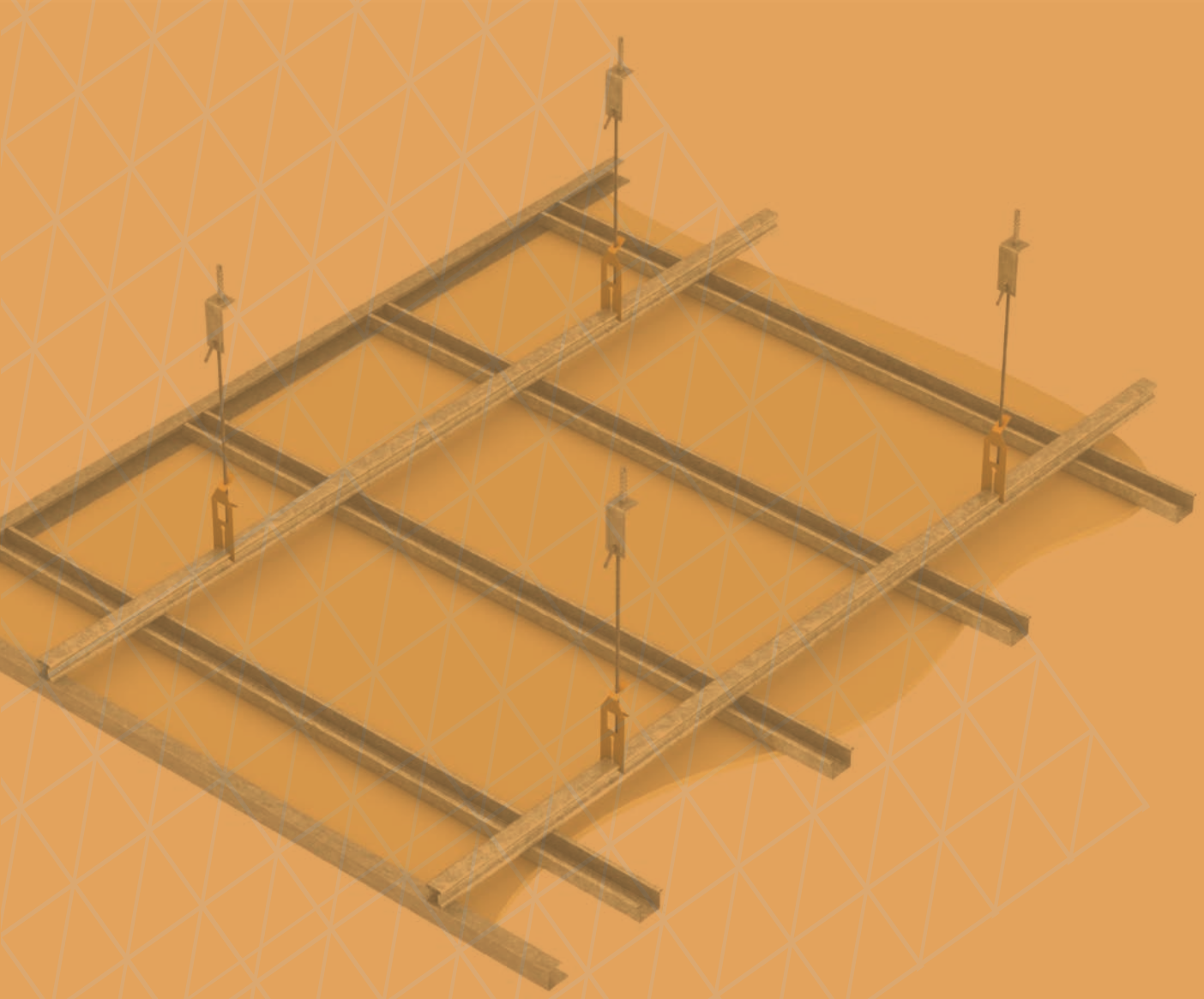

OTHER KEY-LOCK© SYSTEMS IN THIS SERIES:

B2.5 KEY-LOCK© DIRECT FIXED CEILING SYSTEMS
B2.6 KEY-LOCK© RESIDENTIAL CEILING SYSTEMS

B2.4 KEY-LOCK® SUSPENDED CEILING SYSTEMS

Rondo considers a suspended ceiling to be a grid or framing system which is connected to a primary structure via flexible or rigid means, is used to form a plenum space which is typically used for the location of building services or the like and provides a decorative or aesthetic finish to the structure.

The Rondo KEY-LOCK® System has been split into suspended and direct fix sections as a means of differentiating the different design requirements attributable to the two systems, however the same components can and are used for the most part.

Section B2.4.1 covers the design of vented KEY-LOCK® Ceilings.

Section B2.4.2 covers the design of pressure resisting KEY-LOCK® Ceiling.

Within the vented and pressure resisting KEY-LOCK® Ceilings Grid Systems the main difference is the suspension system, where the pressure resisting ceiling grids need to resist the uplift actions across the ceiling. However, the requirements relating to the pressure resisting action does not particularly affect the seismic design of the ceiling grid, and this will appear relatively unchanged between the two systems.

B2.4.1 VENTED CEILINGS

When there is no differential pressure across the KEY-LOCK® Ceiling it is considered as a vented ceiling, as discussed in Section B1.3.3. Accordingly, the following design tables and information do not consider internal differential pressures across the ceiling. Should you need to consider internal differential pressures across the ceiling refer to Section B2.4.2.

The following design tables provide the key design elements necessary for the design of a vented suspended ceiling, being:

- Ceiling grid configuration – assesses the gravity loading requirements of the grid
- Perimeter fixing details – provides the seismic limitations on room sizes for the nominated grid when it is installed with perimeter fixing
- Bracing details – provides the maximum ceiling area that can be restrained by the given bracing options, which will be necessary for larger rooms

The 12m room limit is given as it is the maximum allowable recommended spacing for control joints in flush plasterboard ceilings and the introduction of control joints into a plasterboard ceiling affects the load path for the seismic actions.

There is no downstrutting required for these vented ceiling systems because there is no differential pressure across the ceiling considered.

Bulkheads may be considered as a fixed or free end to the ceiling, provided it is designed accordingly.

The ceiling design follows a cascading pathway starting with the minimum requirements and the limitations under which these can be used, through to the more stringent requirements for when the project scale dictates the increased requirements.

CEILING GRID DESIGN TABLE

For vented ceilings, the grid design only needs to consider the gravity loads to be carried by the ceiling grid.

Table B2.4.1(A) below has been prepared considering the allowable gravity loads the various ceiling grids can carry and shall be used to determine the suspended ceiling grid components, the member spans and spacings and the subsequent suspension set out.

The weight of the ceiling grid does not have to be considered when using Table B2.4.1(A) as it has already been considered in the development of the design table.

TABLE B2.4.1(A): VENTED CEILING FRAMING - TCR & FC SELECTION

Ultimate Wind Pressure (kPa)	Wall Track (WT)	Top Cross Rail (TCR)			Furring Channel (FC)		Maximum Lining Weight (kg/m²) (suspension and gravity load only)
	Rondo PN	Rondo PN	Max. TCR Spacing (mm)	Max Suspension Span (mm)	Rondo PN	Spacing (FS Max)	
0.0	TBC*	127	1200	1200	129	600mm	28
			1200	900			54
			900	900			72
		128	1200	1200			41
			1200	900			67
			900	900			75

Notes:
1. Serviceability limit state deflection is limited to the lesser of the following:
a. L/200 for $G_{max}+W_{ser,dn}$ and $0.9G_{min}+W_{ser,up}$
b. L/360 for G_{max}
2. Where the details above do not provide a solution contact Rondo for a specific design.
3. Table does not allow for seismic requirements.

For seismic implications. Tables B2.4.1 (B1 and B2).
** = Refer to Perimeter Fixing section for wall track configuration*

PERIMETER FIXING LIMITS (SEISMIC OPTIONS 1, 2 AND 4)

Section B1.3.4 provides an overview of the design options available when considering seismic compliance.

The ceiling grid design firstly considers the gravity actions, and Tables B2.4.1(B1) and (B2) below provides the maximum ceiling length in the TCR and FC directions that can be achieved, when installing the ceiling grid as perimeter fixed (option 1) using the ceiling weights, and subsequent grid configuration, determined from Table B2.4.1(A).

In addition to determining the maximum ceiling length for perimeter fixed ceilings, Tables B2.4.1(B1) and (B2) can also be used to assess the maximum ceiling length for seismic jointed ceilings (option 2) and also the maximum width for long narrow ceilings with one-way bracing (option 4). These are explained further below.

Control joints, seismic separation joints or any other discontinuity in the ceiling grid is not permitted within the ceiling length nominated.

SEISMIC JOINTED CEILINGS

When using the Tables B2.4.1(B1) and (B2) to assess a seismic jointed ceiling, the simple solution is to double the room size determined for the perimeter fixed room. However, the seismic joint needs to be positioned such that the **maximum** length of the ceiling in either the TCR or furring channel direction within the seismic joint is not greater than the maximum ceiling length in that direction given in Tables B2.4.1(B1) and (B2).

As an example;

Assume the maximum ceiling length in the TCR direction determined from Table B2.4.1(B1) was 10m. Then for a seismic jointed ceiling the maximum ceiling length in the TCR direction could be 20m, but only if the seismic joint was centrally located at 10m from both perimeter walls. If the seismic joint needed to be located 6m from one wall, to align with columns or other feature say, then the maximum ceiling length in that direction would be limited to 16m as the seismic joint is not permitted to be more than 10m from the opposing wall.

TABLE B2.4.1(B1) MAXIMUM CEILING LENGTH IN TCR DIRECTION

Maximum Length of Ceiling Grid - TCR @ 1200mm							
Lining		Horizontal Seismic Action (Fph/Wp)					
Description	Weight (kg/m²)	0.8g	1.0g	1.3g	1.6g	2.0g	3.6g
1/10mm or 1/13 Standard Plasterboard	9.0	10.1	8.1	6.2	5.0	4.0	2.5
1/13mm Plaster board (Other)	11.5	8.2	6.5	5.0	4.1	3.3	2.0
Unknown Lining 1	13	7.3	5.8	4.5	3.7	2.9	-
Unknown Lining 2	16	6.1	4.8	3.7	3.0	2.4	-
Maximum Length of Ceiling Grid - TCR @ 900mm							
Lining		Horizontal Seismic Action (Fph/Wp)					
Description	Weight (kg/m²)	0.8g	1.0g	1.3g	1.6g	2.0g	3.6g
1/10mm or 1/13 Standard Plasterboard	9.0	12.0	10.8	8.3	6.7	5.4	3.4
1/13mm Plaster board (Other)	11.5	10.9	8.7	6.7	5.4	4.4	2.7
Unknown Lining 1	13	9.8	7.8	6.0	4.9	3.9	-
Unknown Lining 2	16	8.1	6.5	5.0	4.0	3.2	-

TABLE B2.4.1(B2) MAXIMUM CEILING LENGTH IN FC DIRECTION

Maximum Length of Ceiling Grid - FC @ 600 - Perimeter = 141 Track (LOW STRENGTH)							
Lining		Horizontal Seismic Action (Fph/Wp)					
Description	Weight (kg/m²)	0.8g	1.0g	1.3g	1.6g	2.0g	3.6g
1/10mm or 1/13 Standard Plasterboard	9.0	8.6	6.9	5.3	4.3	3.5	-
1/13mm Plaster board (Other)	11.5	7.0	5.6	4.3	3.5	-	-
Unknown Lining 1	13	6.3	5.0	3.9	3.1	-	-
Unknown Lining 2	16	5.2	4.1	3.2	-	-	-
Maximum Length of Ceiling Grid - FC @ 600 - Perimeter = 141 Track + 559 Angle (HIGH STRENGTH)							
Lining		Horizontal Seismic Action (Fph/Wp)					
Description	Weight (kg/m²)	0.8g	1.0g	1.3g	1.6g	2.0g	3.6g
1/10mm or 1/13 Standard Plasterboard	9.0	12.0	12.0	12.0	10.1	8.1	4.5
1/13mm Plaster board (Other)	11.5	12.0	12.0	10.1	8.2	6.5	3.6
Unknown Lining 1	13	12.0	11.7	9.0	7.3	5.9	-
Unknown Lining 2	16	12.0	9.7	7.5	6.1	4.9	-

Notes:

1. *The earthquake actions provided to the table as a function of gravity are representative of the actions applicable to part design ie. adopting a ductility factor μ_p of 1.0.*
2. *The above maximum ceiling length has been checked for the 141 wall track or 141 wall track plus 559 wall angle (as applicable) connected to the supporting structure as per Table B2.4.3(A) Wall track fixing details WTa, WTb, WTc and WTd as applicable.*
3. *The fixed and free ends of the TCR and furring channel shall be as per Table B2.4.3 (D) and (E) based on square set or shadow line finish, as applicable. Note, there are two fixed end detail options for furring channel connections. Low Strength detail uses a #141 channel only while the High Strength detail uses #141 + #559 angle. Ensure the correct fixing detail is used to achieve the required ceiling dimensions.*
4. *Where the details above do not provide a solution contact Rondo for a specific design.*
5. *Fph = Horizontal Seismic Force (N), Wp = Weight of part (kg)*

ONE-WAY BRACED CEILINGS

Table 2.4.1(B1) and (B2) can be used to determine the maximum corridor width of a one-way braced ceiling.

As an example;

Consider a long narrow corridor ceiling. one-way bracing can be installed down the long length of the ceiling while the short (corridor width) can be fixed free. The maximum corridor width for fixed / free perimeter fixing to work will be as nominated in Table B2.4.1 (B1) if TCR is used in the short direction or Table B2.4.1 (B2) if FC is used in the short direction.

BRACING DETAILS

Section B1.3.4 provides an overview of the braced ceiling option when considering seismic compliance.

If you have large ceiling areas or the perimeter walls can't take the horizontal seismic actions, bracing of the ceiling grid can be used to progressively transfer the seismic actions back to the primary structure.

For braced ceilings, the perimeter wall connection is always free to all sides as this allows for any differential movement between the wall and ceiling. The bracing should be installed in a regular and uniform pattern to ensure an even distribution of the seismic actions through the ceiling grid and linings.

Table B2.4.1(C) below shall be used to determine maximum ceiling area that can be restrained by the nominated brace, considering ceiling options 3 and 4. The bracing should be constructed as per Table 2.4.3(I)-(L).

As an example;

If the bracing area is given as 9.0m^2, then the nominal bracing set out should be $\sqrt{9.0}$ = 3.0m. This can be rationalized to 2.4m x 3.6m for a 1200 x 1200 grid set out.

TABLE B2.4.1(C): MAXIMUM BRACING AREA

Lining		Maximum Bracing Area (m^2)											
		BR1 - 64x0.5 - Plenum Depth 1000mm Max						BR2 - 64x0.75 - Plenum Depth 1000mm Max					
Description	Weight (kg/m^2)	Horizontal Seismic Action (Fph/Wp)											
		0.8g	1.0g	1.3g	1.6g	2.0g	3.6g	0.8g	1.0g	1.3g	1.6g	2.0g	3.6g
1/10mm or 1/13 Standard Plaster board	9.0	15.8	12.6	9.7	7.9	6.3	3.5	20.3	16.2	12.5	10.1	8.1	4.5
1/13mm Plaster board (Other)	11.5	12.7	10.2	7.8	6.3	5.1	-	16.4	13.1	10.0	8.2	6.5	3.6
Unknown Lining 1	13.0	11.4	9.1	7.0	5.7	4.5	-	14.7	11.7	9.0	7.3	5.8	3.2
Unknown Lining 2	16.0	9.4	7.5	5.8	4.7	3.7	-	12.1	9.7	7.5	6.0	4.8	2.7
Lining		**Maximum Bracing Area (m^2)**											
		BR3 - 92x0.75 - Plenum Depth 1600mm Max						BR3 - 92x0.75 - Plenum Depth 2000mm Max					
Description	Weight (kg/m^2)	Horizontal Seismic Action (Fph/Wp)											
		0.8g	1.0g	1.3g	1.6g	2.0g	3.6g	0.8g	1.0g	1.3g	1.6g	2.0g	3.6g
1/10mm or 1/13 Standard Plaster board	9.0	19.6	15.7	12.0	9.8	7.8	4.4	17.2	13.8	10.6	8.6	6.9	-
1/13mm Plaster board (Other)	11.5	15.8	12.7	9.7	7.9	6.3	-	13.9	11.1	8.5	6.9	-	-
Unknown Lining 1	13.0	14.2	11.3	8.7	7.1	5.6	-	12.5	10.0	7.7	6.2	-	-
Unknown Lining 2	16.0	11.7	9.4	7.2	5.8	4.7	-	10.3	8.2	6.3	-	-	-

Notes:

1. *The earthquake actions provided to the table as a function of gravity are representative of the actions applicable to part design ie. adopting a ductility factor μ_p of 1.0.*
2. *Contact Technical Services for any other lining configuration not listed above.*
3. *Refer to Table B2.4.3(E) for typical construction details for the free ends.*
4. *Tables based on a ceiling plenum depth of 1000mm max for BR1 and BR2 and 2000mm max for BR3. Refer to Rondo for greater plenum depths.*
5. *Fph = Horizontal Seismic Force (N), Wp = Weight of part (kg)*

PRELIMINARY

The ceiling grid systems covered under Section B2.4.1 are vented ceilings, and as such, do not allow for any internal pressure differential across the ceiling grid. Accordingly, in the first instance, this design assumption should be checked using Figure B1.3.3(E), and if the ceiling system satisfies the requirements for $C_{p,i\ net} = 0$ then Section B2.4.1 can be used to check the ceiling grid.

B2.4.1(A) VENTED PERIMETER FIXED CEILING

This option is typically suitable for small rooms with bounding walls or bulkheads on all four sides, at least two of which must be capable of restraining the ceiling grid. The maximum room size is generally limited to the capacity of the ceiling grid or perimeter connection to transfer the seismic action to the perimeter walls. As the design requires the ceiling grid members to pass the seismic actions to the perimeter walls, it is important that the ceiling grid is not disrupted by control joints or other discontinuities likely to reduce the continuity of the ceiling grid.

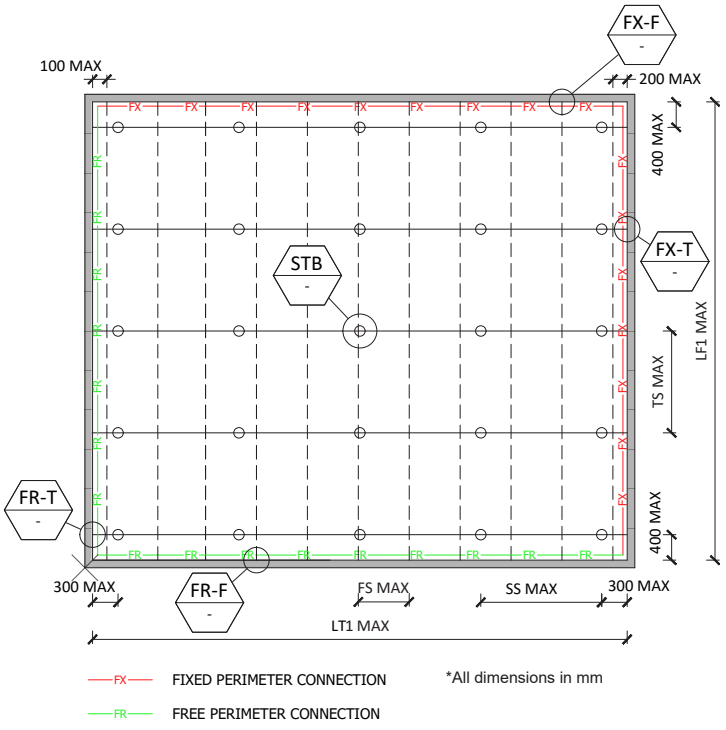

FIGURE B2.4.1(A): VENTED PERIMETER FIXED CEILING

SYSTEM LAYOUT

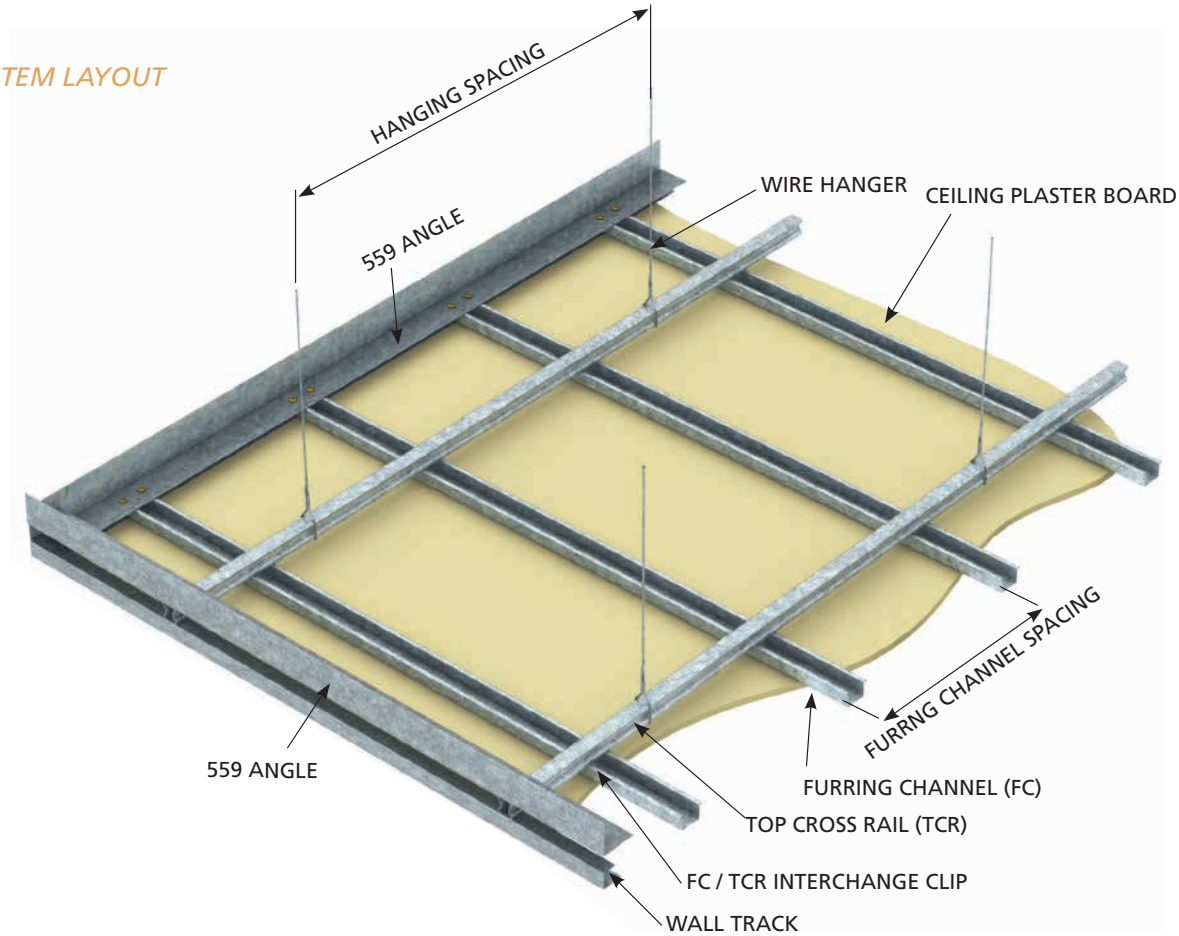

TABLE B2.4.1(D): VENTED PERIMETER FIXED CEILING COMPONENTS

ITEM	DESCRIPTION		RONDO PARTS OPTIONS
1	Wall Track		141, 559+40, 559+141, 559+142
2	Suspension Rod		121, 122, 2.5mm Diameter Wire Hanger
3	FC/TCR Interchange Clip		119, 139, 159, 238
4	Top Cross Rail		127, 127R, 128, 128R
5	Furring Channel		129, 155, 308, 308R
6	Suspension Rod Bracket	Concrete Substrate	247, 249, 547
		Steel/Timber Substrate	274, 534
7	Suspension Clip		124, 124N, 167, 2534
8	Lining		-

Notes:
1. Refer Table B2.2 for the product details.
The maximum ceiling length will be reduced with increasing ceiling weight and seismic action.
2. Refer Table B2.4.3(D) and (E) for FR-F, FR-T, FX-F, FX T, ST and SB details.

SYSTEM SELECTION

For perimeter fixed ceilings, the assessment of the ceiling grid is as follows:

a. Refer to Table B2.4.1(A) to determine the suspended ceiling grid components, the member spans and spacings and the subsequent suspension set out.

b. Check the maximum length of the ceiling grid does not exceed the limits specified in Table Table B2.4.1(B1) and (B2).

c. Check the perimeter walls or bulkheads can restrain the ceiling grid.

The design Table B2.4.1(B1) and (B2) has been prepared based on typical installation details. Accordingly, the ceiling grid is to be installed in accordance with the limitations provided in the notes to Table B2.4.1(B1) and (B2).

DESIGN EXAMPLE

Internal suspended ceiling design is required for a 20m high apartment building located in Auckland suburban area. The apartment is fully enclosed, and the ceiling is compliant with full venting. Ceiling is located 18m above the ground floor and is lined with 1 layer of 13mm standard plasterboard. Ceiling plenum depth is 500mm at its maximum point and there is a concrete slab above. Site sub-soil class for earthquake action is C. The apartment has been nominated as an Importance Level 2 building, and the maximum room size is 8m x 4.7m.

Step 1:

Determine whether you can use this manual or need specific design.

By using Figure B1.1.1(B) this manual can be used for the preliminary design.

Step 2:

Determine wind action (W_u) for ULS

By referring the Figure B1.3.3(E), $C_{p,n}$ = 0, therefore p_n=0

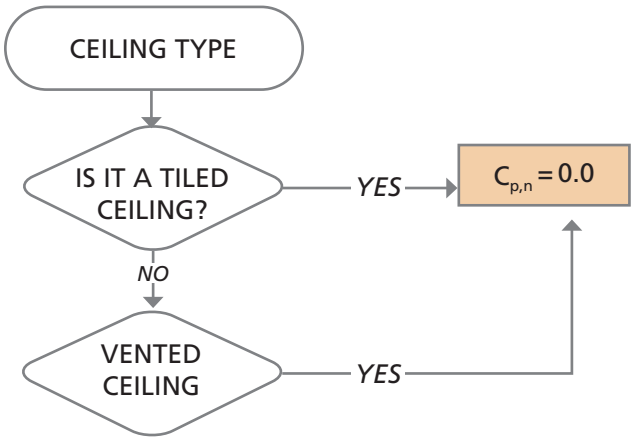

Step 3:

Determine ceiling framing configuration.

By using Table B2.4.1(A) , for 1 layer of 13mm standard plasterboard, which weighs 9.0kg/m^2, the following framing configuration can be used for preliminary design.

Wall Track	- Rondo #141 Track + 559 Angle
Suspension Rod	- Rondo 2.5mm diameter wire hanger Rod at 1200mm max centres
Top Cross Rail	- Rondo #127 TCR at 1200mm max centres
Furring channel	- Rondo #129 FC at 600mm max centres

Step 4:

Determine Seismic action.

Following parameters are given in the above example.

- Location - Auckland
- Site sub-soil class - C

Building importance level can be found in the Structural General Notes or Architect's document. Otherwise use table A2.2(A) from section A1 to determine building importance level.

- Importance level - 2

From Table A3.5.2(B), hazard design factor(Z) for Auckland will be 0.13.

By referring to Figure A3.5.2(C), IL2, Z = 0.13 and site sub soil classification C

F_{ph} = 1.00g

Step 5:

Determine maximum room size for perimeter fixed solution.

Refer to Table B2.4.1(B1) and (B2).

For 1 layer of 13mm standard plasterboard and F_{ph} = 1.00g, the maximum permissible room size is 8.1m x 12m, which is greater than the required 8m x 4.7m room size and therefore is compliant.

If the TCR or FC length is larger than 8.1m x 12m then go to section B2.4.1B for seismic jointed ceilings or B2.4.1C for braced ceiling.

Step 6:

Design summary

Suspension Rod	- Rondo 2.5mm diameter wire hanger at 1200mm max centres
Top Cross Rail	- Rondo #127 TCR at 1200mm max centres
Furring channel	- Rondo #129 FC at 600mm max centres
Maximum Room size	- 8.1m x 12m (TCR x FC)

Step 7:

Detail drawings

See section B2.4.3

Step 8:

Installation procedure

See section B2.4.4

B2.4.1(B) VENTED SEISMIC JOINTED CEILING

This option is an extension of the perimeter fixed ceiling option covered under B2.4.1A. Essentially, the maximum length of the ceiling can be doubled by introduction of a seismic joint through the middle of the ceiling in both the TCR and FC direction.

This is suitable when you have larger rooms, however, still requires the ceiling to be bounded by perimeter walls or bulkheads on all four sides **all of which** must be capable of restraining the ceiling grid. The maximum ceiling area will be reduced with increasing ceiling weight and seismic action, however the seismic action carried by the perimeter walls is the same as that for the perimeter fixed ceiling in B2.4.1A in a like for like installation.

This maximum ceiling length can be doubled provided the distance from any perimeter wall to the seismic control joint does not exceed the maximum ceiling length determined from Table B2.4.1(B1) and (B2), and the ceiling construction details are consistent with the assumptions used in Table B2.4.1(B1) and (B2). All ceiling grid members are **fixed** to the perimeter walls.

SYSTEM LAYOUT

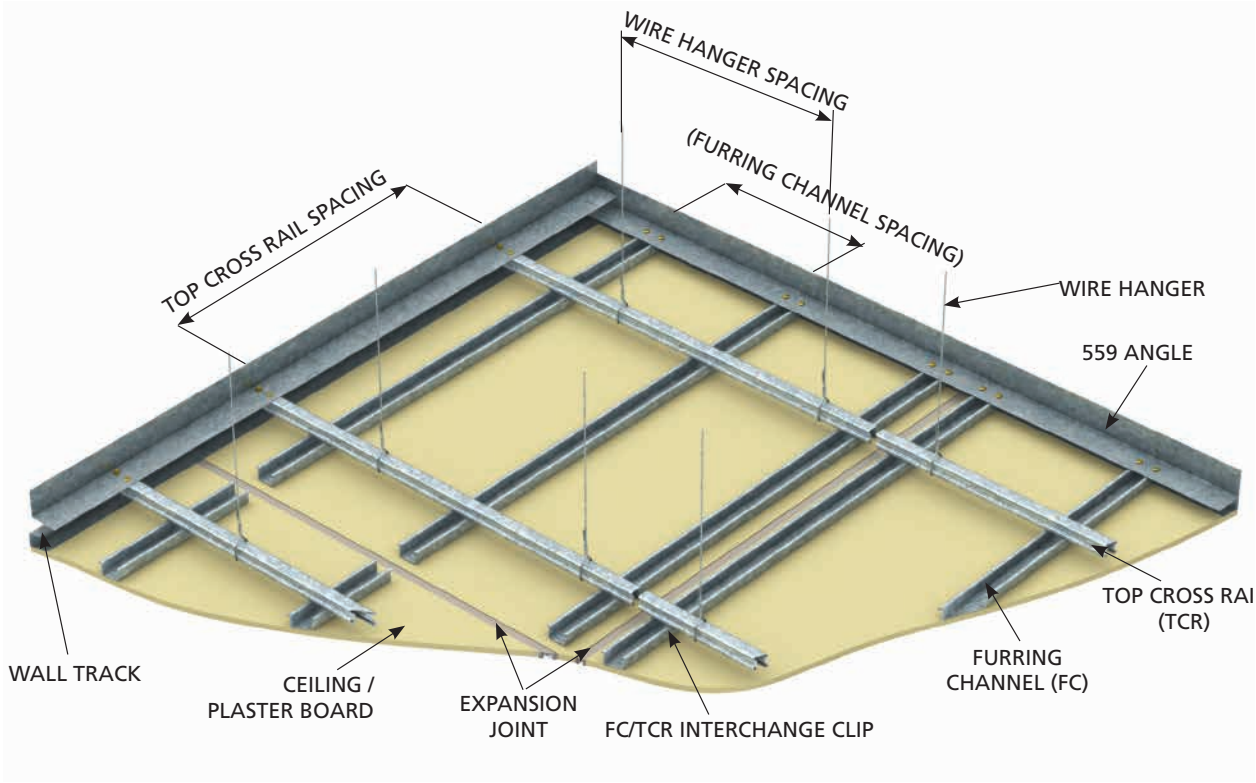

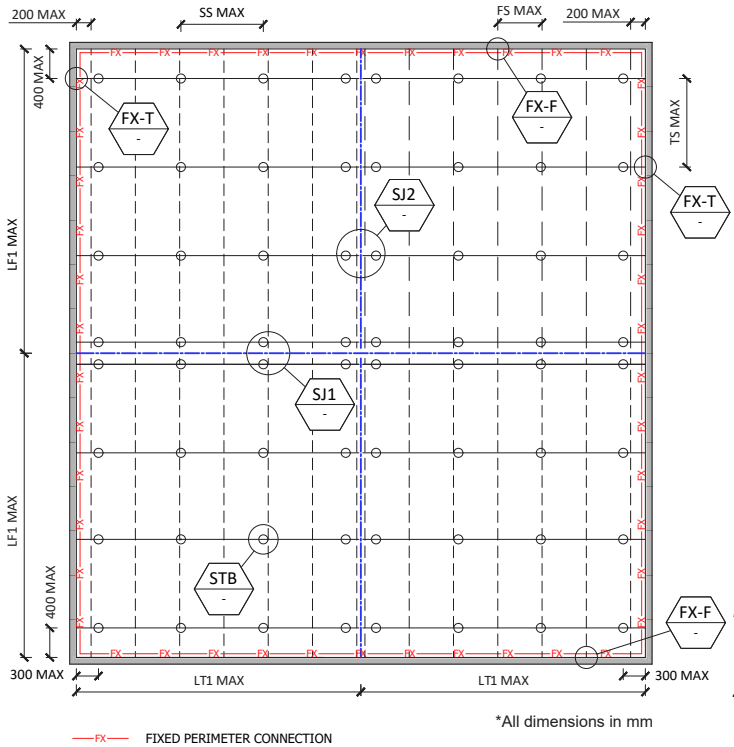

FIGURE B2.4.1(B): VENTED SEISMIC JOINTED CEILING

TABLE B2.4.1(E): VENTED SEISMIC JOINTED CEILING COMPONENTS

ITEM	DESCRIPTION		RONDO PARTS OPTIONS
1	Wall Track		141, 559+140, 559+141, 559+142
2	Suspension Rod		121, 122, 2.5mm Diameter Wire Hanger
3	FC/TCR Interchange Clip		119, 139, 159, 238
4	Top Cross Rail		127, 127R, 128, 128R
5	Furring Channel		129, 155, 308, 308R
6	Suspension Rod Bracket	Concrete Substrate	247, 249, 547
		Steel/ Timber Substrate	274, 534
7	Suspension Clip Lining		124, 124N, 167, 2534
8	Expansion Joint		P35
9	Lining		-

Notes:
1. *Refer to Table B2.2 for more detail description of different part numbers.*
2. *Refer Table B2.4.3 for FX-T, FX-F, SJ1 and SJ2 details.*

It is important to noted that all walls are required to provide lateral restraint to the ceiling grid under seismic actions for this grid design.

SYSTEM SELECTION

For seismic jointed ceilings, the assessment of the ceiling grid follows the same as a perimeter fixed ceiling, with a final check:

a. Refer to Table B2.4.1(A) to determine the suspended ceiling grid components, the member spans and spacings and the subsequent suspension set out.

b. Check the maximum length of the ceiling grid from Table B2.4.1(B1) and (B2).

c. Lay out the seismic joints in the ceiling and ensure the maximum distance between the perimeter walls and the seismic joints does not exceed the limit specified in Table B2.4.1(B).

d. Check the perimeter walls or bulkheads can restrain the ceiling.

The design Table B2.4.1(B1) and (B2) has been prepared based on typical installation details. Accordingly, the ceiling grid is to be installed in accordance with the limitations provided in the notes to Table B2.4.1(B1) and (B2).

DESIGN EXAMPLE

The same example as listed in section 2.4.1(A) will be used but the building has a communal room 15m x 20m, with a vented plasterboard ceiling.

Steps 1 TO 4 INCLUSIVE WILL BE THE SAME AS ABOVE

Step 5:

Determine the maximum ceiling length for perimeter fixed solution, which was 8.1m x 12m given as the TCR direction x FC direction.

The room size can be doubled to 16.2m x 24m, which is greater than the required room size and therefore provides a workable solution. However, the construction details need to be checked:

- Seismic joint to be located 8.1m to perimeter wall parallel to TCR and 12m perpendicular to FC direction (per Table B2.4.1(B1) and (B2) limits)
- 141 wall track + 559 angle to be used
- Fixed ends to be as per Table B2.4.3(D)

Step 6:

Design summary

Suspension Rod	- Rondo 2.5mm diameter wire hanger at 1200mm max centres
Top Cross Rail	- Rondo #127 TCR at 1200mm max centres
Furring channel	- Rondo #129 FC at 600mm max centres

Maximum ceiling length - 16.2m x 24m (TCR x FC)

Detail drawings

See section B2.4.3

Step 7:

Detail drawings

See section B2.4.3

Step 8:

Installation procedure

See section B2.4.4

B2.4.1(C) VENTED TWO-WAY BRACED CEILING

In a two-way braced ceiling there is minimal seismic load transfer between the ceiling and the perimeter wall and subsequently, there is effectively no limit to the room size when the bracing is designed appropriately. This is suitable when you have large open ceiling areas.

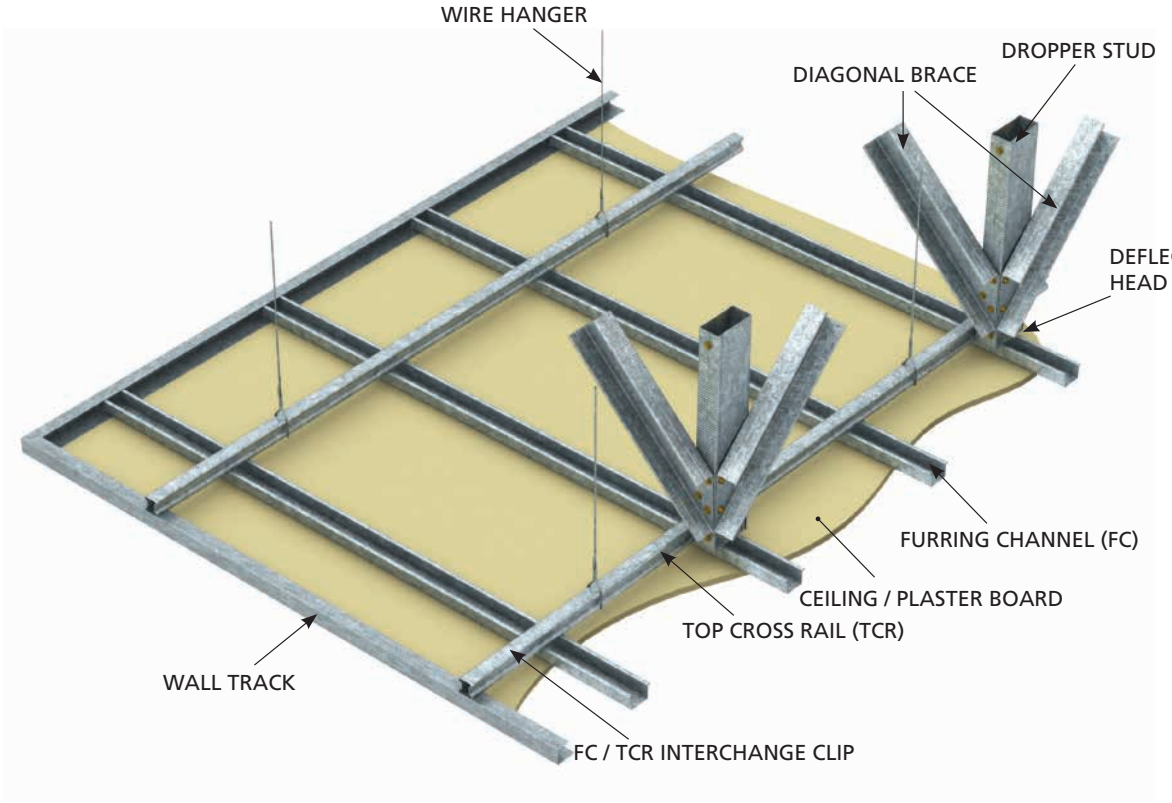

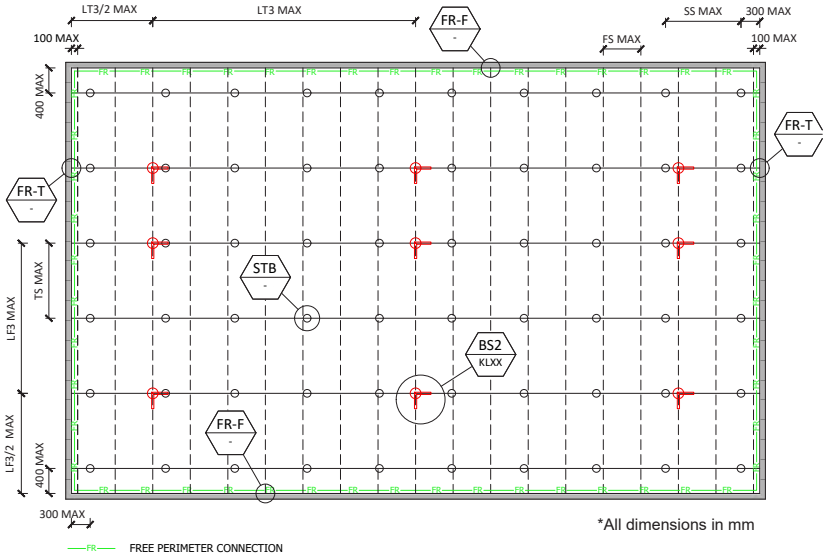

FIGURE B2.4.1(C): VENTED BRACED CEILING

TABLE B2.4.1(F): VENTED BRACED CEILING COMPONENTS

ITEM	DESCRIPTION		RONDO PARTS OPTIONS
1	Wall Track		140, 141, 142
2	Suspension Rod		121, 122, 2.5mm Diameter Wire Hanger
3	FC/TCR Interchange Clip		119, 139, 159, 238
4	Top Cross Rail		127, 127R, 128, 128R
5	Furring Channel		129, 155, 308, 308R
6	Suspension Rod Bracket	Concrete Substrate	247, 249, 547
		Steel/Timber Substrate	274, 534
7	Suspension Clip		124, 124N, 167, 2534
8	Dropper Stud (Boxed)		112,491,495
9	Brace Stud		112,491,495
10	Lining		-

All perimeter wall connections are **free ends**, to the ceiling grid, however there will be minor shear loads resulting from the ceiling grid outstand beyond the last bracing line. These actions are not critical in the overall ceiling design, and the ceiling linings are typically sufficient to restrain the grid member.

Notes:
1. Refer Table B2.2 for more detail description of different part numbers.
2. Refer Table B2.4.3 for FR-T, FR-F, STB and BS2 details.

SYSTEM SELECTION

For braced ceilings, the assessment of the ceiling grid starts with gravity loads, but finishes with bracing area as follows:

a. Refer to Table B2.4.1(A) to determine the suspended ceiling grid components, the member spans and spacings and the subsequent suspension set out.

b. Determine the seismic action applicable for the ceiling using Figure A3.5.2(C).

c. Select a suitable bracing member and determine the maximum ceiling area that can be carried by the brace using Table B2.4.1(C).

d. Lay out the bracing on the Reflected Ceiling Plan (RCP) and ensure:

i. no individual brace exceeds the area limits, and the overall brace limits are satisfied.

ii. the bracing is laid out uniformly and evenly throughout the ceiling.

iii. there are no irregularities in the ceiling area likely to compromise the ceiling bracing. If unsure, contact your Rondo representative to clarify.

The design Table B2.4.1(C) has been prepared based on typical installation details. Accordingly, the ceiling grid is to be installed in accordance with the limitations provided in the notes to Table B2.4.1(C), in particular the ceiling free ends.

DESIGN EXAMPLE

Internal suspended ceiling design is required for a 12m high school located in Hamilton. The school is fully enclosed, the ceiling is fully vented and has overall dimensions of 25m x 30m. Ceiling is on the ground floor and lined with 1 layer of 13mm plasterboard weighing 11.5kg/m^2. The ceiling plenum depth is 700mm and the roof structure is metal deck sheeting on purlins. Site sub-soil class for earthquake action is C, per the Structural Plans.

Step 1:

Determine whether you can use this manual or need specific design.

By using Figure B1.1.1(B) this manual can be used for a preliminary design.

Step 2:

Determine wind action (W_u) for ULS.

By referring the figure B1.3.3(E)
$C_{p,n}$ = 0, therefore p_n=0

Step 3:

Determine ceiling framing configuration

Using 1 layer of 13mm plasterboard (11.5kg/m^2) in Table B2.4.1(A) the framing configuration can be determined as follows:

Suspension Rod	– Rondo 2.5mm diameter wire hanger Rod at 1200mm max centres
Top Cross Rail	- Rondo #127 TCR at 1200mm max centres
Furring channel	- Rondo #129 FC at 600mm max centres

Step 4:

Determine the Seismic action for the ULS.

Following parameters are given in the above example.

- Location - Hamilton
- Site sub-soil class - C

Building importance level is not listed in the Structural General Notes or Architect's document. By using Table A2.2(A) a school building can be classified as Importance Level 3 (IL3).

- Importance level - 3

From Table A3.5.2(B), the hazard design factor(Z) for Hamilton will be 0.16.

With reference to Figure A3.5.2(C) and using IL3, Z=0.16 and site sub soil classification D, the seismic action F_{ph} is assessed as 1.65g.

Step 5:

Determine the maximum bracing area.

Refer to Table B2.4.1(C) and starting with a 64 x 0.75bmt stud (BR2), the ceiling weight of 11.5kg/m^2 and F_{ph}/W_p = 1.65g the maximum ceiling area per brace by interpolation between 1.6g and 2.0g will be 7.95m^2 for BR2.

Step 6:

Design summary

Suspension Rod	- 2.5mm diameter wire hanger at 1200mm max centres
Top Cross Rail	- Rondo #127 TCR at 1200mm max centres
	- Ensure roof purlin spacing does not exceed 1200mm
Furring channel	- Rondo #129 FC at 600mm max centres
Maximum Brace Area	- 7.95m^2 for BR2 bracing configuration.

Step 7:

Determine number of braces required.

Ceiling overall dimensions	25m x 30m
Ceiling Area	750m^2
Minimum number of braces	= 750/7.95= 95
Check set out	$\sqrt{}$7.95 = 2.80m

For 127TCR at 1200mm centres, adopt braces to every second TCR which gives a spacing in one direction = 2.4m.

Check maximum spacing along TCR
= 7.95/2.4m

= 3.30m this will be rationalised to 3.00m to work in with the furring channel spacing (600mm), given the seismic action has been determined at the top of the building and could be reduced as the ceiling is on the ground floor.

Step 8:

Layout bracing on RCP

i. Check no brace exceeds 2.4m x 3.0m spacing and there is 95 braces in total as a minimum.

ii. Ensure the bracing is evenly distributed throughout the ceiling area.

iii. Check the ceiling does not having any irregularities which could compromise the ceiling bracing. Refer to Section B1.3.4.3 for a description of some typical ceiling irregularities.

Step 9:

Detail drawings

See section B2.4.3

Step 10:

Installation procedure

See section B2.4.4

Ceiling is connected to purlins therefore TCR should be installed perpendicular to purlins.

B2.4.1(D) VENTED ONE-WAY BRACED CEILING

The one-way braced ceiling utilises both perimeter fixing and bracing to achieve seismic compliance. Here the ceiling is typically connected to one long side of the passageway using a fixed perimeter connection and is braced in the opposing direction. The width of the passageway will be limited in the same manner as a perimeter fixed ceiling, but the length of the passageway will be unlimited when the bracing is designed and installed accordingly.

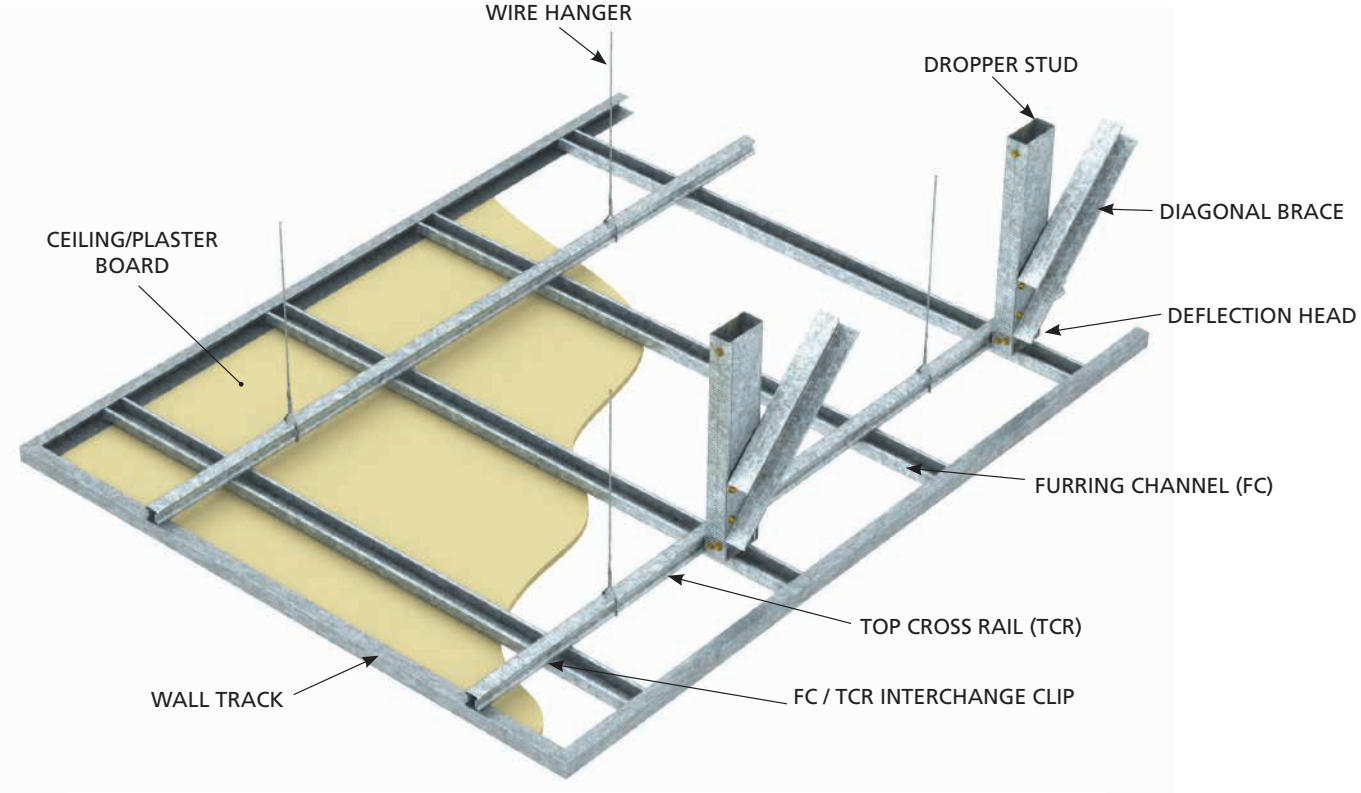

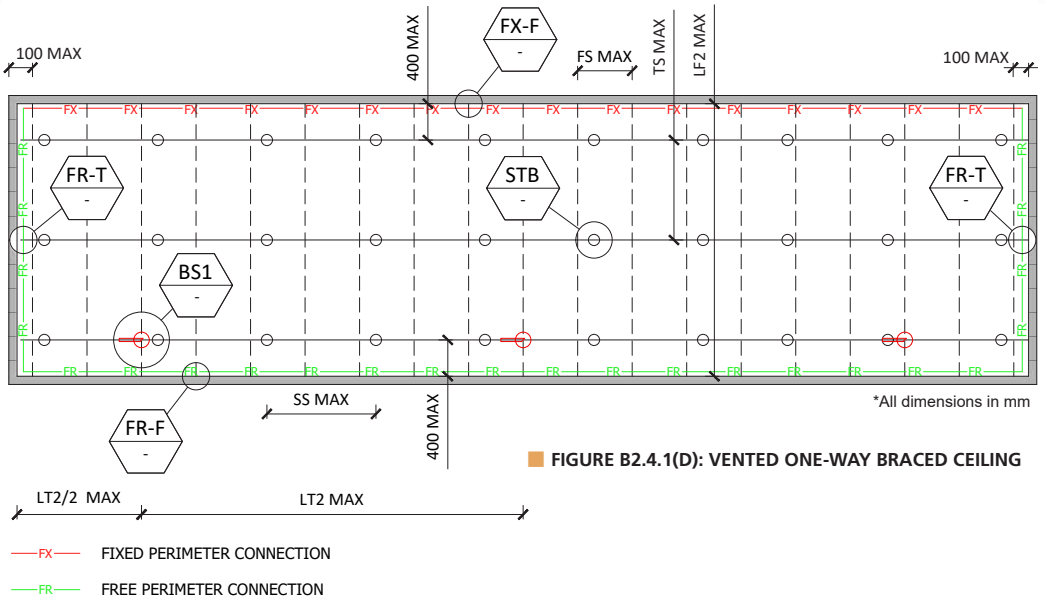

FIGURE B2.4.1(D): VENTED ONE-WAY BRACED CEILING

TABLE B2.4.1(G): VENTED ONE-WAY BRACED CEILING COMPONENTS

ITEM	DESCRIPTION		RONDO PARTS OPTIONS
1	Wall Track		141, 559 + 140, 559 + 141, 559 + 142
2	Suspension Rod		121, 122, 2.5mm Diameter Wire Hanger
3	FC/TCR Interchange Clip		119, 139, 159, 238
4	Top Cross Rail		127, 127R, 128, 128R
5	Furring Channel		129, 155, 308, 308R
6	Suspension Rod Bracket	Concrete Substrate	247, 249, 547
		Steel/Timber Substrate	274, 534
7	Suspension Clip		124, 124N, 167, 2534
8	Dropper Stud (Boxed)		112,491,495
9	Brace Stud		112, 491, 495
10	Expansion Joint		P35
11	Lining		-

Notes:
1. *Refer Table B2.2 for more detail description of different part numbers.*
2. *Refer Table B2.4.3 for FR-T, FR-F, FX-F, STB and BS1 details*

SYSTEM SELECTION

For one-way braced ceilings, the assessment of the ceiling grid generally follows both the perimeter fixed and braced ceiling method as follows:

a. Refer to Table B2.4.1(A) to determine the suspended ceiling grid components, the member spans and spacings and the subsequent suspension set out.

b. Determine the seismic action applicable for the ceiling using Figure A3.5.2(C).

c. Check the maximum width of the passageway using a perimeter fix design per Table B2.4.1(B1) and (B2).

d. Select a suitable bracing member and determine the maximum ceiling area that can be carried by the brace using Table B2.4.1(C).

e. Layout the bracing on the Reflected Ceiling Plan (RCP) and ensure:

   i. no individual brace exceeds the area limits, and the overall brace limits are satisfied.

   ii. the bracing is laid out uniformly and evenly throughout the ceiling.

   iii. there are no irregularities in the ceiling area likely to compromise the ceiling bracing. If unsure, contact your Rondo representative to clarify.

The design Table B2.4.1(C) has been prepared based on typical installation details. Accordingly, the ceiling grid is to be installed in accordance with the limitations provided in the notes to Table B2.4.1(C), in particular the ceiling free ends.

DESIGN EXAMPLE

Internal suspended ceiling design is required for a long corridor in a 50m high apartment located in Tauranga suburban area. The apartment is fully enclosed, and the ceiling is fully vented. The ceiling is located 40m above the ground floor and lined with 1 layer of 13mm standard plasterboard. Ceiling plenum depth is 1500mm and it is suspended from a concrete slab above. Site sub-soil class for earthquake action is B. The apartment has been designated as Importance Level 3.

Step 1:

Determine whether you can use this series or need specific design.

By using Figure B1.1.1(B) of Series B1 can be used for the preliminary design.

Step 2:

Determine wind action (W_u) for ULS.

By referring the figure B1.3.3(E)
$C_{p,n}$ = 0, therefore p_n=0

Step 3:

Determine ceiling framing configuration.

By using Table B2.4.1(A), for 1 layer of 13mm standard plasterboard the following framing configuration can be used for a preliminary design.

Suspension Rod	- Rondo 2.5mm diameter wire hanger at 1200mm max centres
Top Cross Rail	- Rondo #127 TCR at 1200mm max centres
Furring channel	- Rondo #129 FC at 600mm max centres

Step 4:

Determine the seismic action for ULS.

Following parameters are given in the above example.

- Location - Tauranga
- Site sub-soil class - B

Building importance level is designated as IL3.

- Importance level - 3

From Table A3.5.2(B) the hazard design factor (Z) for Tauranga will be 0.20.

Then, referring to Figure A3.5.2(C) for IL3, Z=0.20 and site sub soil classification C, F_{ph}/W_p will be 2.07g

F_{ph}/W_p should now be adjusted to reflect the actual site sub-soil class B_e.

From table A3.5.2(C) the below Design Response Coefficient for Parts $C_p(T_p)$ can be read:

B	1.00
C (Shallow Soil)	1.33

The adjustment F_{ph}/W_p will be:

2.07 x 1.0/1.33 = 1.56g

Adopt F_{ph}/W_p =1.60 for the seismic design, given the height amplification factor is based on the ceiling being at the top of the building.

Step 5:

Determine the maximum corridor width (perimeter fixed).

By using table B2.4.1(B1) for 1 layer of 13mm standard plasterboard and F_{ph}/W_p =1.60, maximum corridor width will be 5m.

Step 6:

Determine the maximum corridor length (braced).

By using table B2.4.1(C), for 1 layer of 13mm standard plasterboard and F_{ph}/W_p =1.60, maximum brace area will be 9.80m² for BR2 bracing configuration.

Step 6:

Design summary

Furring channel	- Rondo #129 FC at 600mm max centres
Top Cross Rail	- Rondo #127 TCR at 1200mm max centres
Suspension Rod	- Rondo #121 Rod at 1200mm max centres
Maximum Corridor width	- 5m
Maximum Brace area	- 9.80m² per brace

Step 7:

Layout bracing on RCP

i. Check the ceiling area per brace doesn't exceed 9.80m² and the total number of braces is satisfied.

ii. Ensure the bracing is evenly distributed throughout the ceiling area.

iii. Check the ceiling does not having any irregularities which could compromise the ceiling bracing, in particular, ensure the ceiling is discontinued at other doorways or hallways etc. Refer to Section B1.3.4.3 for a description of some typical ceiling irregularities.

Step 8:

Detail drawings

See section B2.4.3

Step 9:

Installation procedure

See section B2.4.4

B2.4.2 PRESSURE RESISTING KEY-LOCK® CEILING

The ceiling grid systems covered under Section B2.4.2 are pressure resisting ceilings and are to be designed to resist the internal pressure differential across the ceiling grid, as discussed in Section B1.3.3. Accordingly, the applicable internal pressure coefficient $C_{p,n}$ net for the ceiling should be checked using Figure B1.3.3(E), or AS/NZS1170.2, and the subsequent internal design pressure (p_i) should be determined in accordance with AS/NZS1170.2 or Section B1.3.3.1. Thereafter, this section can be used to determine the ceiling grid design.

It should be noted that these internal pressures, can be either positive or negative, and can occur even when the ceiling has not been constructed to maintain a pressure seal. With reference to Figure B1.3.3(E) only a negative $C_{p,i}$ value is given when the concealed ceiling grid shares a common plenum space with an exposed grid ceiling. In these instances the ceiling will only experience negative (suction) pressures and downstrutting will not be required. However, it is most important the suspension system can sustain the imposed actions.

The internal pressures always act at 90° to the ceiling soffit, with negative pressures acting in the same direction as the gravity loads and positive pressures acting in the opposite direction as gravity loads. These pressures, when applied to the ceiling, are transferred through the ceiling linings, into the ceiling grid and suspension system and back to the primary structure.

The suitability or otherwise of the ceiling linings to accommodate these actions has not been considered in this series and should be independently checked by your lining board supplier.

The following design tables provide the key design elements necessary for the design of a pressure resisting suspended ceiling, being:

- Downstrut details for the general ceiling suspension
- Ceiling grid configuration – assesses the gravity loading requirements in conjunction with the internal design pressures to be resisted by the ceiling grid
- Perimeter fixing details – for assessment of the seismic limitations of the ceiling length based on the nominated ceiling grid when it is installed with perimeter fixing
- Bracing details – provides the maximum ceiling area that can be restrained by the given bracing options, which will be necessary for larger rooms

The 12m room limit is given as it is the maximum allowable recommended spacing for control joints in flush plasterboard ceilings and the introduction of control joints into a plasterboard ceiling affects the load path for the seismic actions.

Bulkheads may be considered as a fixed or free end to the ceiling, provided it is designed accordingly. Additionally, bulkheads in these ceilings will need to be designed using the internal pressure applied as a lateral load to the bulkhead fascia.

The ceiling design follows a cascading pathway starting with the minimum requirements and the limitations under which these systems can be used, through to the more stringent requirements for when the project scale or specific construction details dictates the increased requirements.

DOWNSTRUTTING

When ceilings experience positive pressures greater than the self-weight of the system, then the ceiling can lift upwards and in this case downstruts will need to be installed at each suspension point to resist this uplift action.

Typically, Rondo specifies a downstrut in addition to the standard suspension system as this allows the ceiling to be installed and levelled conventionally. There are 3 different downstrut options available. Refer Table B2.4.2 (A) for selecting a downstrut based on the plenum depth and the primary structure.

TABLE B2.4.2(A): DOWNSTRUT OPTIONS

Downstrut Options	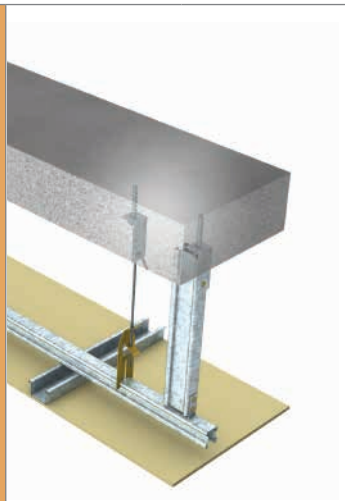		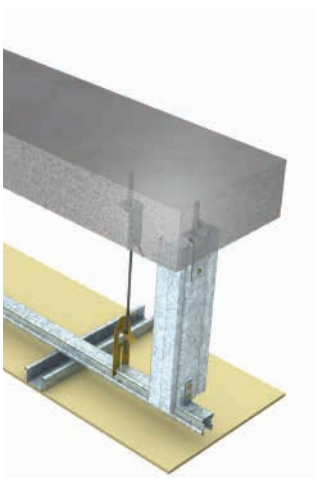	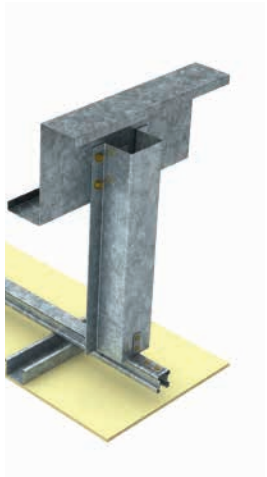
Primary Structure	*Concrete*		*Concrete*	*Steel*
Plenum Depth (mm)	*230-1000*		*230-2000*	*200-2000*
Rondo DownStrut	*DS1(A)*	*DS1(B)*	*DS2*	*DS3*
Rondo Parts	*127*	*128*	*112,491*	*M535, 188*

Notes:
1. Contact Rondo Engineering Services if the plenum depth is greater than 2000mm.

PRESSURE RESISTING CEILING DESIGN TABLE

For pressure resisting ceilings the design procedure is similar to that for vented ceilings, in that the first consideration will be the vertical loads, however in this instance the wind loading will be acting in the same direction as the self-weight (gravity) loads on the ceiling assuming the ceiling is flat.

In the ceiling Design Table B2.4.2(B) below, the stated pressure is the Ultimate Limit State internal pressure the ceiling will be subjected to. The nominated ceiling grids already consider all relevant load combinations and scenarios to assess the worst case, accordingly, once the internal design pressure is established it can be directly compared with the value in the table and the ceiling grid can be determined.

Table B2.4.2(B) may not be suitable for ceilings requiring a level 5 finish, critical lighting situations or ceilings with a gloss or brittle finish. These ceiling designs should be discussed with your Rondo representative before commencing works.

TABLE B2.4.2(B): PRESSURE-RESISTING CEILING FRAMING - TCR, FC & DOWNSTRUT SELECTION

Ultimate Wind Pressure (kPa)	Lining		Suspension Rod (SR)		Top Cross Rail (TCR)		Furring Channel (FC)		Downstrut (Rondo PN)		
									Concrete Sub-strate		Steel Substrate
	Description	Weight (kg/m²)	Rondo PN	Spacing (SS Max) (mm)	Rondo PN	Spacing (TS Max) (mm)	Rondo PN	Spacing (FS Max) (mm)	Plenum Depth (mm) (230-1000)	Plenum Depth (mm) (1000-2000)	Plenum Depth (mm) (200-2000)
0.25	1/10mm or 1/13mm Standard Plasterboard	9.0	121	1200	127	1200	129	600	127	112	M535
	1/13mm Plasterboard (Other)	11.5	121	1200	127	1200	129	600	127	112	M535
	Unknown Lining 1	13	121	1200	127	1100	129	600	127	112	M535
	Unknown Lining 2	16	121	900	127	1200	129	600	127	112	M535
0.50	1/10mm or 1/13mm Standard Plasterboard	9.0	121	900	127	1200	129	600	127	112	M535
	1/13mm Plasterboard (Other)	11.5	121	900	127	1200	129	600	127	112	M535
	Unknown Lining 1	13	121	900	127	1200	129	600	127	112	M535
	Unknown Lining 2	16	121	900	127	1200	129	600	127	112	M535
0.75	1/10mm or 1/13mm Standard Plasterboard	9.0	121	900	127	900	129	600	127	112	M535
	1/13mm Plasterboard (Other)	11.5	121	900	127	900	129	600	127	112	M535
	Unknown Lining 1	13	121	900	127	900	129	600	127	112	M535
	Unknown Lining 2	16	121	900	127	900	129	600	127	112	M535
1.00	1/10mm or 1/13mm Standard Plasterboard	9.0	121	900	127	700	129	600	127	112	M535
	1/13mm Plasterboard (Other)	11.5	121	900	127	700	129	600	127	112	M535
	Unknown Lining 1	13	121	900	127	700	129	600	127	112	M535
	Unknown Lining 2	16	121	900	127	700	129	600	127	112	M535

Notes:
(1) Contact Rondo Engineering Services for any other lining configurations not listed above.
(2) Serviceability limit state deflection is limited to the following:
a. L/200 for Gmax+Wser,dn and 0.9G+Wser,up. b. L/360 for Gmax.
(3) Table assumes installation in accordance with the details herein.

Where the ceiling is to be installed to the underside of a floor, roof or other structure with discrete framing members the TCR is to be installed at 90° to the primary framing members (ie; purlins, bearers or joists). Where this would result in over spanning of the TCR, suitable bridging is to be installed.

PERIMETER FIXING LIMITS (SEISMIC OPTIONS 1, 2 AND 4)

Section B1.3.4 provides an overview of the design options available when considering seismic compliance.

For pressure resisting ceiling grids, the design is primarily controlled by the vertical actions on the grid. Table B2.4.2(C) below provides the maximum ceiling length that can be achieved, when installing the ceiling grid as perimeter fixed (option 1) using the relevant ceiling weights.

In addition to determining the maximum ceiling length for perimeter fixed ceilings, Table B2.4.2(C) can also be used to assess the maximum ceiling length for seismic jointed ceilings (option 2) and the maximum width for long narrow ceilings with one-way bracing (option 4). These are explained further below.

Control joints, seismic separation joints or any other discontinuity in the ceiling grid is not permitted within the ceiling length nominated.

SEISMIC JOINTED CEILINGS

When using the Table B2.4.2(C1) and (C2) to assess a seismic jointed ceiling, the simple solution is to double the room size determined for the perimeter fixed room. However, the seismic joint needs to be positioned such that the maximum length of the ceiling in either the TCR or furring channel direction within the seismic joint is not greater than the maximum ceiling length in that direction given in Table B2.4.2(C1) and (C2).

As an example;

Assume the maximum ceiling length in the TCR direction determined from Table B2.4.2(C1) was 10m. Then for a seismic jointed ceiling the maximum ceiling length in the TCR direction could be 20m, but only if the seismic joint was centrally located at 10m from both perimeter walls. If the seismic joint needed to be located 6m from one wall, to align with columns or other feature say, then the maximum ceiling length in that direction would be limited to 16m as the seismic joint is not permitted to be more than 10m from the opposing wall.

B2.4.2(C1): MAXIMUM CEILING LENGTH IN TCR DIRECTION

Maximum Length of Ceiling Grid TCR @ 1200mm							
Lining		Horizontal Seismic Action (Fph/Wp)					
Description	Weight (kg/m²)	0.8g	1.0g	1.3g	1.6g	2.0g	3.2g
1/10mm or 1/13 Standard Plasterboard	9.0	10.1	8.1	6.2	5.0	4.0	2.5
1/13mm Plasterboard (Other)	11.5	8.2	6.5	5.0	4.1	3.3	2.0
Unknown Lining 1	13	7.3	5.8	4.5	3.7	2.9	-
Unknown Lining 2	16	6.1	4.8	3.7	3.0	2.4	-
Maximum Length of Ceiling Grid TCR @ 900mm							
Lining		Horizontal Seismic Action (Fph/Wp)					
Description	Weight (kg/m²)	0.8g	1.0g	1.3g	1.6g	2.0g	3.2g
1/10mm or 1/13 Standard Plasterboard	9.0	12.0	10.8	8.3	6.7	5.4	3.4
1/13mm Plasterboard (Other)	11.5	10.9	8.7	6.7	5.4	4.4	2.7
Unknown Lining 1	13	9.8	7.8	6.0	4.9	3.9	-
Unknown Lining 2	16	8.1	6.5	5.0	4.0	3.2	-

TABLE B2.4.2(C2): MAXIMUM CEILING LENGTH IN FC DIRECTION

Maximum Length of Ceiling Grid - FC @ 600mm - Perimeter = 141 Track (LOW STRENGTH)							
Lining		Horizontal Seismic Action (Fph/Wp)					
Description	Weight (kg/m²)	0.8g	1.0g	1.3g	1.6g	2.0g	3.6g
1/10mm or 1/13 Standard Plasterboard	9.0	8.6	6.9	5.3	4.3	3.5	-
1/13mm Plasterboard (Other)	11.5	7.0	5.6	4.3	3.5	-	-
Unknown Lining 1	13	6.3	5.0	3.9	3.1	-	-
Unknown Lining 2	16	5.2	4.1	3.2	-	-	-
Maximum Length of Ceiling Grid - FC @ 600mm - Perimeter = 141 Track + 559 Angle (HIGH STRENGTH)							
Lining		Horizontal Seismic Action (Fph/Wp)					
Description	Weight (kg/m²)	0.8g	1.0g	1.3g	1.6g	2.0g	3.6g
1/10mm or 1/13 Standard Plasterboard	9.0	12.0	12.0	12.0	10.1	8.1	4.5
1/13mm Plasterboard (Other)	11.5	12.0	12.0	10.1	8.2	6.5	3.6
Unknown Lining 1	13	12.0	11.7	9.0	7.3	5.9	-
Unknown Lining 2	16	12.0	9.7	7.5	6.1	4.9	-

Notes:

1. *The earthquake actions provided to the table as a function of gravity are representative of the actions applicable to component design ie. adopting a ductility factor (Rc) of 2.5. Earthquake actions appropriate to connection design have been used where required in the analysis.*
2. *The above maximum ceiling length has been checked for the 140 wall track connected to the supporting structure as per Table B2.4.3(A) Wall track fixing details WTa, WTb, WTc and WTd as applicable.*
3. *The fixed and free ends of the TCR and FC shall be as per Table B2.4.3 (D) and (E) based on square set or shadow line finish, as applicable. (Note: there are two fixed end detail options for furring channel connections. Low Strength detail uses a #141 channel only while the High Strength detail uses #141 + #559 angle. Ensure the correct fixing detail is used to achieve the required ceiling dimensions.)*
4. *Where the details above do not provide a solution contact Rondo for a specific design.*
5. *Fph = Horizontal Seismic Force (N)*
   Wp = Weight of part (kg)

ONE-WAY BRACED CEILINGS

Table 2.4.2(C1) and (C2) can be used to determine the maximum corridor width of a one-way braced ceiling.

As an example;

Consider a long narrow corridor ceiling. one-way bracing can be installed down the long length of the ceiling while the short (corridor width) can be fixed free. The maximum corridor width for fixed / free perimeter fixing to work will be as nominated in Table B2.4.2 (C1) if TCR is used in the short direction or Table B2.4.2 (C2) if FC is used in the short direction.

BRACING DETAILS

Section B1.3.4 provides an overview of the braced ceiling option when considering seismic compliance.

If you have large ceiling areas or the perimeter walls can't take the horizontal seismic actions, bracing of the ceiling grid can be used to progressively transfer the seismic actions back to the primary structure.

For braced ceilings, the perimeter connection is always free to all sides as this allows for any differential movement between the walls and ceiling. The bracing should be installed in a regular and uniform pattern to ensure an even distribution of the seismic actions through the ceiling grid and linings.

Table B2.4.2(D) below shall be used to determine maximum ceiling area that can be restrained by the nominated brace, considering ceiling options 3 and 4. The bracing should be constructed as per Table 2.4.3(I) and (J).

As an example: If the bracing area is given as 12m^2, then the nominal bracing set out should be $\sqrt{12}$ = 3.5m. This can be rationalised to 3m x 3.6m for 1200 x 1200 grid set out.

When this is used to check a one-way bracing configuration, then the spacing would be:

Brace spacing = Brace area x 2 / room width.

In the above perimeter fixing example, the room width was not to exceed 10m, which would then mean the brace spacing is not to exceed 12 x 2 / 10 = 2.4m. Again, this spacing would be rationalized to suit the ceiling grid set out.

TABLE B2.4.2(D): MAXIMUM BRACING AREA

Lining		Maximum Bracing Area (m^2)											
		BR1 - 64x0.5 - Plenum Depth 1000mm Max						BR2 - 64x0.75 - Plenum Depth 1000mm Max					
Description	Weight (kg m^2)	Horizontal Seismic Action (Fph/Wp)											
		0.8g	1.0g	1.3g	1.6g	2.0g	3.6g	0.8g	1.0g	1.3g	1.6g	2.0g	3.6g
1/10mm or 1/13mm Standard Plasterboard	9.0	15.8	12.6	9.7	7.9	6.3	3.5	20.3	16.2	12.5	10.1	8.1	4.5
1/13mm Plasterboad (Other)	11.5	12.7	10.2	7.8	6.3	5.1	-	16.4	13.1	10.0	8.2	6.5	3.6
Unknown Lining 1	13.0	11.4	9.1	7.0	5.7	4.5	-	14.7	11.7	9.0	7.3	5.8	3.2
Unknown Lining 2	16.0	9.4	7.5	5.8	4.7	3.7	-	12.1	9.7	7.5	6.0	4.8	2.7
Lining		**Maximum Bracing Area (m^2)**											
		BR3 - 64x0.5 - Plenum Depth 1600mm Max						BR3 - 64x0.75 - Plenum Depth 2000mm Max					
Description	Weight (kg m^2)	Horizontal Seismic Action (Fph/Wp)											
		0.8g	1.0g	1.3g	1.6g	2.0g	3.6g	0.8g	1.0g	1.3g	1.6g	2.0g	3.6g
1/10mm or 1/13mm Standard Plasterboard	9.0	19.6	15.7	12.0	9.8	7.8	4.4	17.2	13.8	10.6	8.6	6.9	-
1/13mm Plasterboad (Other)	11.5	15.8	12.7	9.7	7.9	6.3	-	13.9	11.1	8.5	6.9	-	-
Unknown Lining 1	13.0	14.2	11.3	8.7	7.1	5.6	-	12.5	10.0	7.7	6.2	-	-
Unknown Lining 2	16.0	11.7	9.4	7.2	5.8	4.7	-	10.3	8.2	6.3	-	-	-

Notes:

1. *The earthquake actions provided to the table as a function of gravity are representative of the actions applicable to part design ie. adopting a ductility factor μp of 1.0. Earthquake actions appropriate to connection design have been used where required in the analysis.*
2. *Contact Technical Services for any other lining configuration not listed above.*
3. *Refer to Table B2.4.3(E) for typical construction details for the free ends.*
4. *Tables based on a ceiling plenum depth of 1000mm max for BR1 and BR2 and 2000mm max for BR3. Refer to Rondo for greater plenum depths.*
5. *Fph = Horizontal Seismic Force (N)*
   Wp = Weight of part (kg

B2.4.2(A) PRESSURE RESISTING PERIMETER FIXED CEILING

This ceiling design is the same as vented perimeter fixed ceiling with the exception that the ceiling grid may require downstrutting if it is subjected to uplift wind actions.

SYSTEM LAYOUT

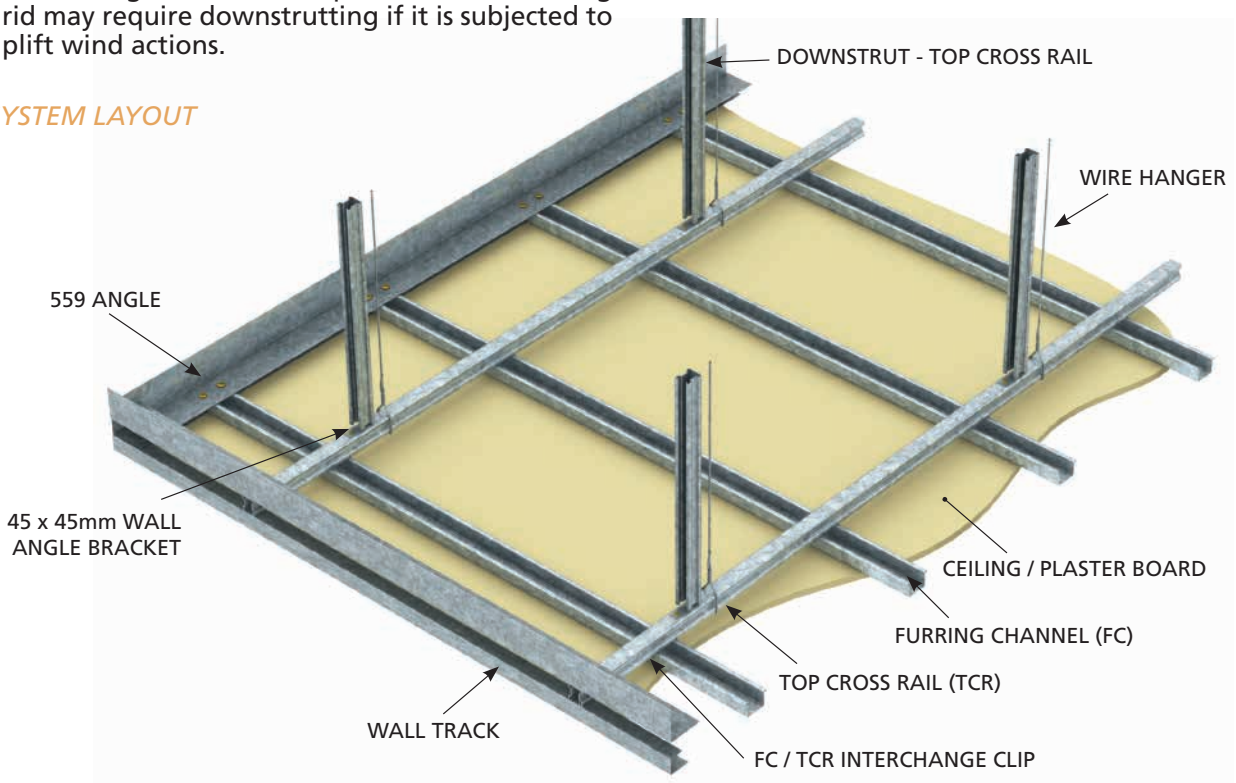

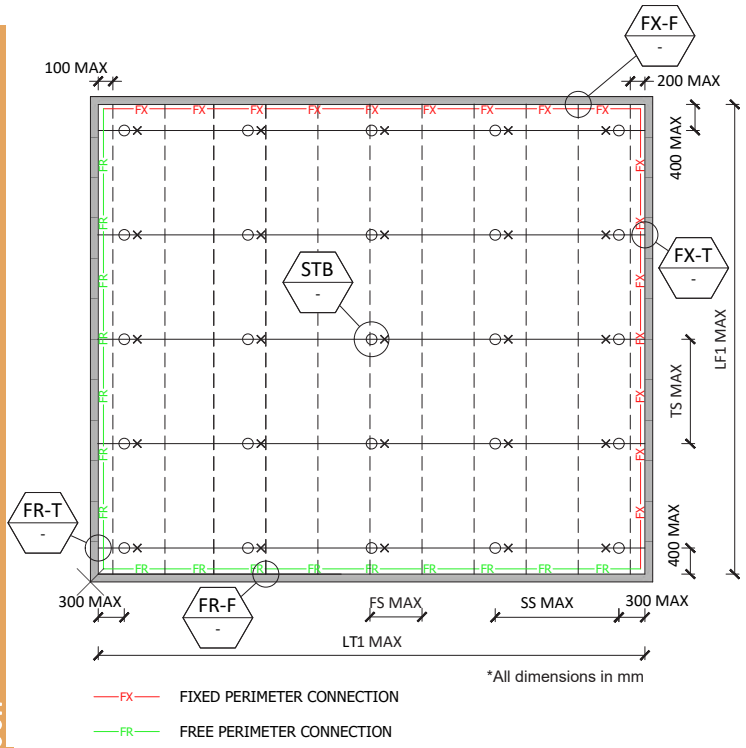

FIGURE B2.4.2(A): PRESSURE RESISTING PERIMETER FIXED CEILING

TABLE B2.4.2(E): VENTED PERIMETER FIXED CEILING COMPONENTS

ITEM	DESCRIPTION		RONDO PARTS OPTIONS
1	Wall Track		141, 559 + 140, 559 + 141, 559 + 142
2	Suspension Rod		121, 122, 2.5mm Diameter Wire Hanger
3	FC/TCR Interchange Clip		119, 139, 159, 238
4	Top Cross Rail		127, 127R, 128, 128R
5	Furring Channel		129, 155, 308, 308R, 309A
6	Suspension Rod Bracket	Concrete Substrate	247, 249, 547
		Steel/Timber Substrate	274, 534
7	Suspension Clip		124, 124N, 167, 2534
8	Downstrut	Concrete Substrate	127, 128
			112, 491, 495
		Steel/Timber Substrate	M535
9	Lining		-

Notes:
1. Refer Table B2.2 for more detail description of different part numbers.
2.Refer Table B2.4.3 for FX-F, FX-T, FR-F, FR-T, STB and DS details.

The maximum ceiling length will be reduced with increasing ceiling weight and seismic action.

SYSTEM SELECTION

For perimeter fixed pressure resisting ceilings, assuming the design internal pressure has already been determined in accordance with Section B1.3.3.1, the assessment of the ceiling grid is as follows:

a. Determine the plenum depth required, and the supporting structure construction (ie; purlins or concrete slab).

b. Refer to Table B2.4.2(A) and select an appropriate downstrut system.

c. Refer to Table B2.4.2(B) and check the appropriate section of the table matching to the design internal pressure previously determined. Scroll across the table to determine the suspended ceiling grid components, the member spans and spacings and the subsequent suspension set out. Take note of the downstrut member nominated.

d. Check the maximum length of the ceiling grid does not exceed the limits specified in Table B2.4.2(C1) and (C2).

e. Check the perimeter walls or bulkheads can restrain the ceiling grid.

The design Tables B2.4.2(B) and (C) have been prepared based on typical installation details. Accordingly, the ceiling grid is to be installed in accordance with the limitations provided in the Tables.

DESIGN EXAMPLE

Internal suspended ceiling design is required for a 20m high apartment located in Pukekohe suburban area. The apartment has big sliding doors to a balcony and operable windows. Ceiling is located on the top floor 18m above the ground floor and lined with 1 layer of 13mm standard plasterboard. The ceiling is not fire rated and can be considered to be a non-pressure sealed, pressure resisting ceiling. The ceiling plenum depth is 600mm and it is attached to a concrete slab above. Site sub-soil class for earthquake action is B. The Structural Notes confirm the building is Importance Level 2 and is located in Terrain Category 3.

Step 1:

Determine the building parameters for wind and seismic events.

Importance Level - 2

Region - NZ1 (Refer Figure A3.4.2.1(A)

Terrain Category - 3 (Refer Figure A3.4.2.1(B)

Building Height - 20m

Site sub-soil class - B

Step 2:

Determine whether you can use this series or need specific design

By using Figure B1.1.1(B) it can be determined this manual can be used for a preliminary design.

Step 3:

Determine basic wind pressure (p_u)

Building is less than 25m in height, therefore the average roof height shall be used (refer Figure A3.4.2.1(C)) to determine the basic pressure from Table A3.4.2(A) as follows:

For Region NZ1, IL = 2, TC =3 and roof height = 20m refer Table A3.4.2(A)

$$p_u = 1.074 \text{ kPa}$$

Step 4:

Determine the internal pressure coefficient ($C_{p,i}$) and the design internal pressure (p_i) on the ceiling for ULS.

a. Consider façade leakage

When considering the façade leakage scenario, it is assumed all doors and windows are closed and the Ultimate Limit State wind speed is used to determine the resulting internal ultimate design pressure ($p_{i,u}$).

With reference to Figure B1.3.3(E), and assuming an equally permeable façade, the internal pressure coefficients will be $C_{p,n}$=-0.3 or +0.3.

REGION A - IMPORTANCE LEVEL 2				
FLOOR HEIGHT	TERRAIN CATEGORY 3			
	$C_{p,n}$			
z (m)	0.2	0.3	0.4	0.5
10	0.167	0.251	0.335	0.42
20	0.215	0.322	0.43	0.54
30	0.243	0.365	0.49	0.61

Then using Table B1.3.3.1(A), the internal design pressures can be interpolated as follows:

Ceiling Type	$p_{i,u}$ (kPa)
C1 - Non-pressure sealed ceiling	±0.322

Notes:
1. Internal pressure will be positive (uplift) or negative (suction)

b. Consider an opening in the facade

Dominant openings in the facade only effect the net pressure coefficients applicable to pressure sealed, pressure resisting ceilings such as fire rated ceilings. This example relates to a non-pressure sealed, pressure resisting ceiling, therefore step 4b is not required.

c. Check compliance with AS/NZS1170.2 Clause 5.3.3 Ceilings

which do not form a permanent seal shall be designed for a net differential pressure coefficient of 0.3, has been satisfied.

d. Summary design pressure

The internal pressure used for design will be the larger absolute of the pressures calculated in step 4:

Ceiling Type	$p_{i,u}$ (kPa)
C1 - Non-pressure sealed ceiling	+0.322/-0.322

Step 5:

Determine ceiling framing configuration.

By using Table B2.4.2(B),

Internal pressure derived from above is 0.322 kPa therefore use next closest pressure 0.50kPa.

For 1 layer of 13mm standard plasterboard and 0.500 kPa ceiling pressure the following framing configuration can be used for preliminary design.

Suspension Rod - Rondo #121 Rod at 900mm max centres

Top Cross Rail - Rondo #127 TCR at 1200mm max centres

Furring channel - Rondo #129 FC at 600mm max centres

Step 6:

Check whether downstrut is required.

We have determined the positive ceiling pressure +0.322 kPa, therefore downstrut are to be installed at every suspension point. For the 0.50kPa ceiling pressure and 600mm plenum depth the downstrut will be as follows.

Downstrut - Rondo #127 TCR at every suspension point.

Note:
Downstruts may not be required in all circumstances, for example, when a key-lock ceiling shares a common plenum space with an exposed tile grid ceiling. Refer to B1.3.3 or Rondo for further confirmation.

Step 7:

Determine Seismic action.

Following parameters are given in the above example.

- Location - Pukekohe
- Site sub-soil class - B
- Importance level - 2

From Table A3.5.2(B), hazard design factor(Z) for Pukekohe will be 0.13.

By referring Figure A3.5.2(C) for IL2, Z=0.13 and site sub soil classification C, F_{ph}/W_p is given as 1.04.

F_{ph}/W_p should be corrected to the site sub-soil class B.

From Table A3.5.2(C) spectral shape factor Ch(0) are listed as below:

B_e	1.00
C (Shadow Soil)	1.33

Reduced F_{ph}/W_p will be 1.04 x 1.0 / 1.33 = 0.782 or, F_{ph} = 0.782 W_p,

Step 8:

Determine maximum ceiling length using Table B2.4.2(C1) and (C2).

For 1 layer of 13mm standard plasterboard and adopting F_{ph}/W_p = 0.80g, maximum ceiling length will be 10.1m x 12m in the TCR and furring channel directions respectively.

If the ceiling run is longer than 10.1m x 12m in either direction then the ceiling can be designed using Section B2.4.2B for seismic jointing or B2.4.2C for two-way braced ceilings, as appropriate.

Step 9:

Design summary

Suspension Rod	- Rondo #121 Rod at 900mm max centres
Top Cross Rail	- Rondo #127 TCR at 1200mm max centres
Furring channel	- Rondo #129 FC at 600mm max centres
Downstrut	- Rondo #127 TCR at every suspension point
Maximum Room size	- 10.1m x 12m

Step 10:

Detail drawings

See section B2.4.3

Step 11:

Installation procedure

See section B2.4.4

B2.4.2(B) PRESSURE RESISTING SEISMIC JOINTED CEILING

This option is an extension of the perimeter fixed ceiling option covered under B2.4.2(A). Essentially, the maximum length of the ceiling can be doubled by introduction of a seismic joint through the middle of the ceiling in both the TCR and F_C direction.

This is suitable when you have larger rooms, however, still requires the ceiling to be bounded by perimeter walls or bulkheads on all four sides **all of which** must be capable of restraining the ceiling grid. The maximum ceiling area will be reduced with increasing ceiling weight and seismic action.

This maximum ceiling length can be doubled provided the distance from any perimeter wall to the seismic joint does not exceed the maximum ceiling length determined from Table B2.4.2(C1) and (C2) and the ceiling construction details are consistent with the assumptions used in Table B2.4.2(C1) and (C2). All ceiling grid members are **fixed** to the perimeter walls.

SYSTEM LAYOUT

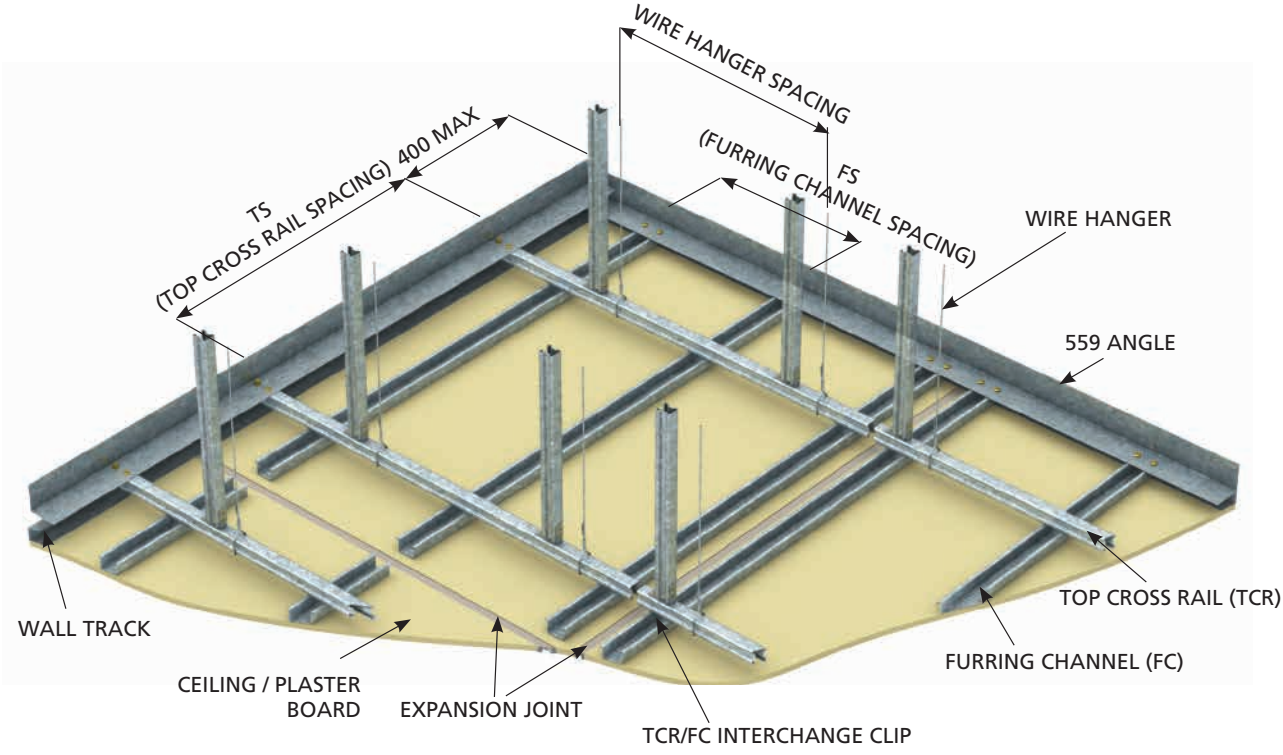

FIGURE B2.4.2(B): PRESSURE RESISTING SEISMIC JOINTED CEILING

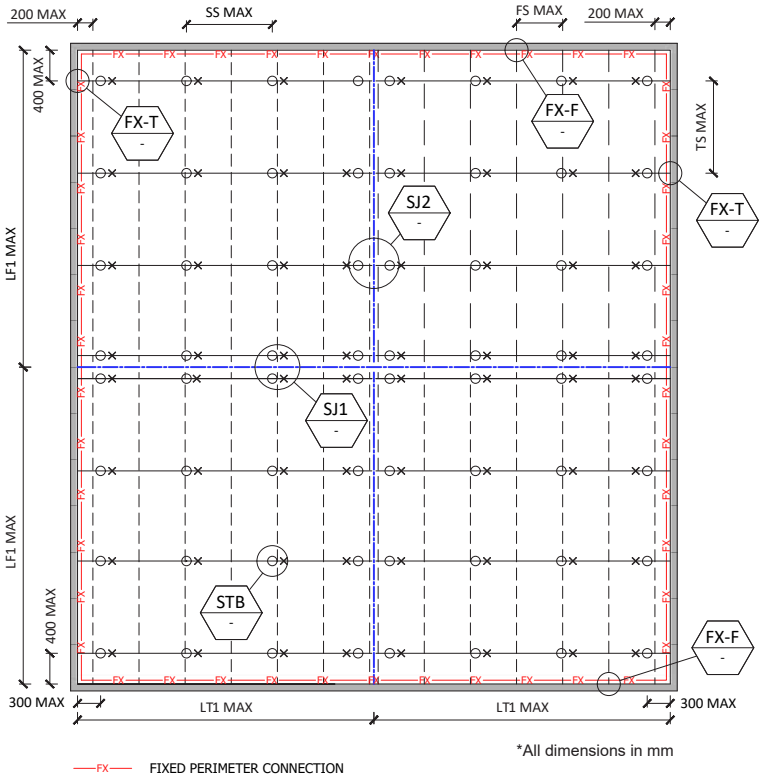

TABLE 2.4.2(F): PRESSURE RESISTING SEISMIC JOINTED CEILING COMPONENTS

ITEM	DESCRIPTION		RONDO PARTS OPTIONS
1	Wall Track		559 + 140, 559 + 141, 559 + 142
2	Suspension Rod		121, 122, 2.5mm Diameter Wire Hanger
3	FC/TCR Interchange Clip		119, 139, 159, 238
4	Top Cross Rail		127, 127R, 128, 128R
5	Furring Channel		129, 155, 308, 308R
6	Suspension Rod Bracket	Concrete Substrate	247, 249, 547
		Steel/Timber Substrate	274, 534
7	Suspension Clip		124, 124N, 167, 2534
8	Downstrut	Concrete Substrate	112,491,495
			127, 128
		Steel/Timber Substrate	M535
9	Lining		-

Notes:

1. *Refer Table B2.2 for more detail description of different part numbers.*
2. *Refer Table B2.4.3 for FX-F, FX-T,SJ1,SJ2, STB and DS details.*

SYSTEM SELECTION

For seismic jointed ceilings, the assessment of the ceiling grid follows the same as a perimeter fixed ceiling, with a final check:

a. Determine the plenum depth required, and the supporting structure construction (ie; purlins or concrete slab).

b. Refer to Table B2.4.2(A) and select an appropriate downstrut system.

c. Refer to Table B2.4.2(B) and check the appropriate section of the table matching to the design internal pressure previously determined. Scroll across the table to determine the suspended ceiling grid components, the member spans and spacings and the subsequent suspension / downstrut set out. Take note of the downstrut member nominated.

d. Check the maximum length of the ceiling grid specified in Table B2.4.2(C1) and (C2).

e. Layout the seismic joints in the ceiling and ensure the maximum distance between the perimeter walls and the seismic joints does not exceed the limit specified in Table B2.4.2(C1) and (C2).

f. Check the perimeter walls or bulkheads can restrain the ceiling grid.

The design Table B2.4.2(B) and (C1) and (C2) have been prepared based on typical installation details. Accordingly, the ceiling grid is to be installed in accordance with the limitations provided in the Tables.

DESIGN EXAMPLE

Same example as listed in section B2.4.2(A) but also need to check a ceiling approximately 15m x 20m.

Step 1:

Check for any differences in design assumptions relating to wind and seismic analysis

If there are no differences in the design assumptions then can start at Step 8, otherwise work through the design again in accordance with B2.4.2(A).

Step 2:

Determine maximum ceiling length.

Previously determined maximum ceiling length = 8.1m x 12m.

Ceiling length can be doubled to 16.2m x 24m.

a. Check ceiling lengths

Check the distance from the seismic joint is not greater than 8.1m to perimeter wall parallel to TCR direction and 12m parallel to FC direction.

If the distance from the seismic joint to a perimeter wall exceeds 8.1m along TCR x 12m along FC then design as a braced ceiling per Section B2.4.2(C).

Step 3:

Design summary

Suspension Rod	- Rondo 2.5mm diameter wire hanger at 900mm max centres
Top Cross Rail	- Rondo #127 TCR at 1200mm max centres
Furring channel	- Rondo #129 FC at 600mm max centres
Downstrut	- Rondo #127 TCR at every suspension point
Maximum Ceiling Length	- 8.1m along TCR x 12m along FC between any perimeter wall and seismic joint - 16.2m x 24m overall between perimeter walls

Note:
Downstruts may not be required in all circumstances, for example, when a key-lock ceiling shares a common plenum space with an exposed tile grid ceiling. Refer to B1.3.3 or Rondo for further confirmation.

Step 4:

Detail drawings

See section B2.4.3

Step5:

Installation procedure

See section B2.4.4

B2.4.2(C) PRESSURE RESISTING TWO-WAY BRACED CEILING

In a two-way braced ceiling, there is minimal seismic or wind load transfer between the ceiling and the perimeter wall and subsequently, there is effectively no limit to the room size when the bracing is designed appropriately. This is suitable for large open plan ceiling areas.

Typically, the downstrut members should be selected to match the bracing members to minimise Framing differences at the respective locations. Table B2.4.2(B) is used to assess the framing members, spans and spacings and downstrut members whilst the maximum bracing area can be determined from Table B2.4.2(D).

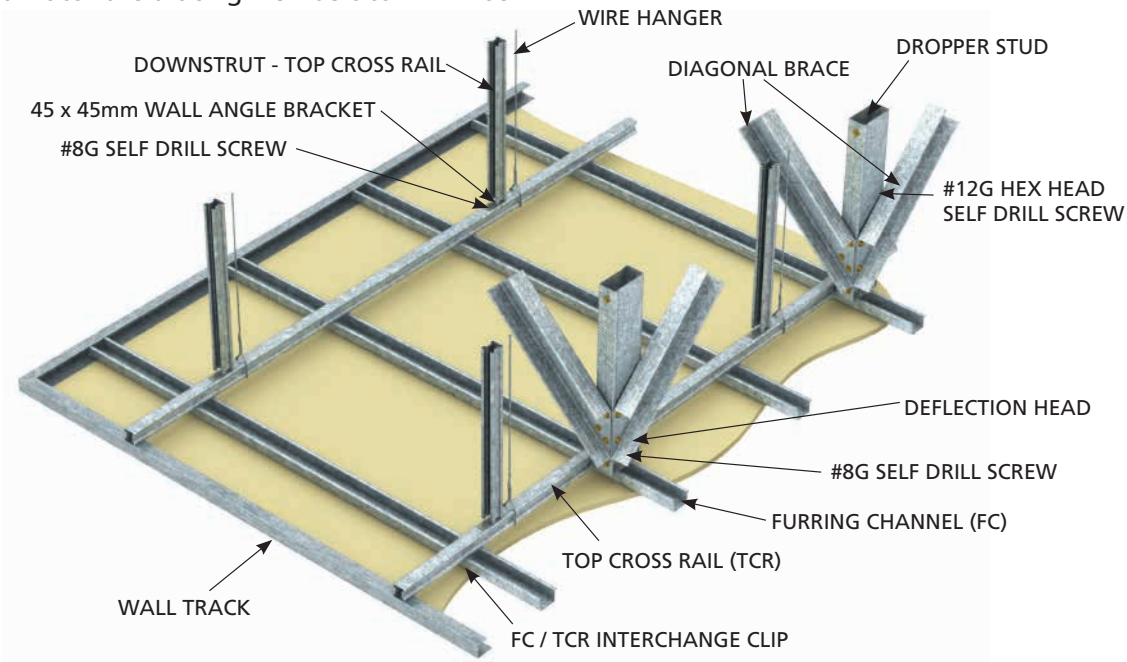

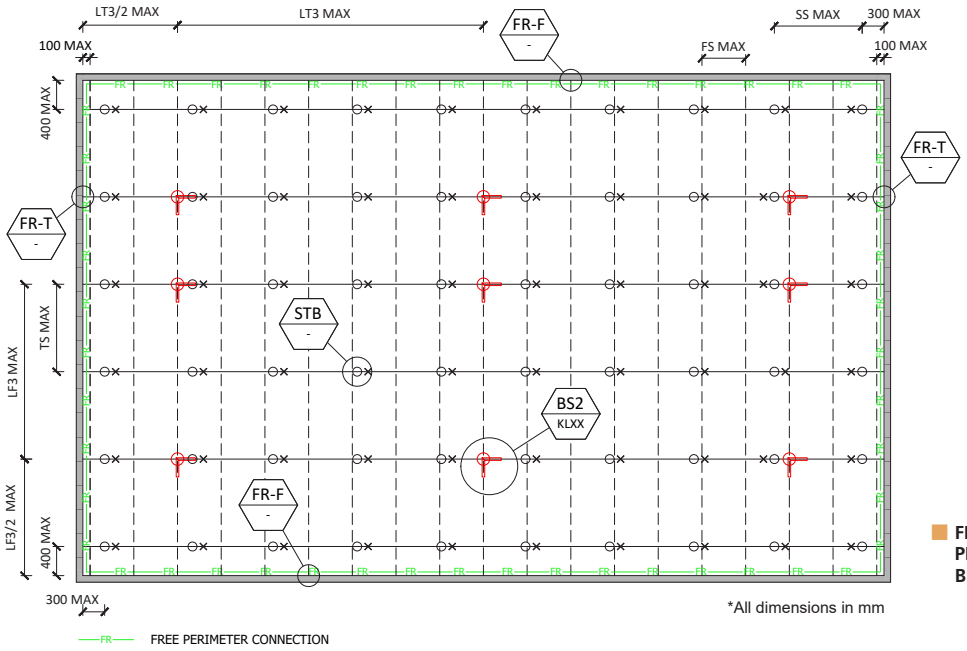

FIGURE B2.4.2(C): PRESSURE RESISTING BRACED CEILING

All perimeter wall connections are **free ends**, to the ceiling grid. There will be minor shear loads and wind actions resulting from the ceiling grid outstand beyond the last bracing line.

These actions are not critical in the overall ceiling design, and the ceiling linings are typically sufficient to restrain the grid member.

TABLE B2.4.2(G): PRESSURE RESISTING BRACED CEILING COMPONENTS

ITEM	DESCRIPTION		RONDO PARTS OPTIONS
1	Wall Track		140, 141, 142
2	Suspension Rod		121, 122, 2.5mm Diameter Wire Hanger
3	FC/TCR Interchange Clip		119, 139, 159, 238
4	Top Cross Rail		127, 127R, 128, 128R
5	Furring Channel		129, 155, 308, 308R
6	Suspension Rod Bracket	Concrete Substrate	247, 249, 547
		Steel/Timber Substrate	274, 534
7	Suspension Clip		124, 124N, 167, 2534
8	Dropper Stud (Boxed)		112, 491, 495
9	Brace Stud		112, 491, 495
10	Lining		-

Notes:
1. Refer Table B2.2 for more detail description of different part numbers.
2. Refer Table B2.4.3 for FR-F, FR-T,BS2, STB and DS details.

SYSTEM SELECTION

For braced ceilings, the assessment of the ceiling grid starts with gravity loads, but finishes with bracing area as follows:

a. Determine the plenum depth required, and the supporting structure construction (ie; purlins or concrete slab).

b. Determine the appropriate internal design pressure and seismic action for the ceiling.

c. Refer to Table B2.4.2(A) and select an appropriate downstrut system.

d. Refer to Table B2.4.2(B) and check the appropriate section of the table matching to the design internal pressure previously determined. Scroll across the table to determine the suspended ceiling grid components, the member spans and spacings and the subsequent suspension / downstrut set out. Take note of the downstrut member nominated.

e. Determine the seismic action applicable for the ceiling using Figure A3.5.2(C).

f. Select a suitable bracing member and determine the maximum ceiling area that can be carried by the brace using Table B2.4.2(D).

g. Layout the bracing on the Reflected Ceiling Plan (RCP) and ensure:

i. no individual brace exceeds the area limits, and the overall brace limits are satisfied.

ii. the bracing is laid out uniformly and evenly throughout the ceiling.

iii .there are no irregularities in the ceiling area likely to compromise the ceiling bracing. If unsure, contact your Rondo representative to clarify.

The design Table B2.4.2(C1) and (C2) and (D) have been prepared based on typical installation details. Accordingly, the ceiling grid is to be installed in accordance with the limitations provided in the Tables, in particular the ceiling free ends.

DESIGN EXAMPLE

Internal suspended ceiling design is required for a 50m high mixed used development located in Auckland suburban area. The building is effectively sealed. Ceiling is located 40m above the ground floor, is lined with 1 layer of 13mm standard plasterboard and has overall dimensions of 32m x 46m. The ceiling is not fire rated and can be considered to be a non-pressure sealed, pressure resisting ceiling. Ceiling plenum depth is 1000mm and it is attached to concrete. Site sub-soil class for earthquake action is C. Importance level has been stated in the structural notes as 2.

Step 1:

Determine the building parameters for wind and seismic events.

Importance Level - 2

Region - NZ1 (Refer Figure A3.3.1(C))

Terrain Category - 3 (Refer Figure A3.4.2.1(B)

Building Height - 50m

Site sub-soil class - C

Step 2:

Determine whether you can use this manual or need specific design

By using Figure B1.1.1(B) this series can be used for the preliminary design.

Step 3:

Determine the basic wind pressure (p_u)

Building is greater than 25m in height, therefore the floor height shall be used (refer Figure A3.4.2.1(C) to determine the basic pressure from Table A3.4.2(A) as follows:

For Region NZ1, IL = 2, TC = 3 and
Floor height = 40m
P_u = 1.314 kPa

Step 4:

Determine the internal pressure coefficient ($C_{p,i}$). and the design internal pressure (pi) on the ceiling for ULS.

a. Consider façade leakage

When considering the façade leakage scenario, it is assumed all doors and windows are closed and the Ultimate Limit State wind speed is used to determine the resulting internal ultimate design pressure ($p_{i,u}$).

With reference to Figure B1.3.3(E), and for a closed and sealed facade, the internal pressure coefficients will be $C_{p,i}$ = -0.3 or 0.0.

REGION NZ1/NZ2 - IMPORTANCE LEVEL IL2				
FLOOR HEIGHT	TERRAIN CATEGORY 3			
	$C_{p,n}$			
z (m)	0.2	0.3	0.4	0.5
10	0.167	0.251	0.335	0.419
20	0.215	0.322	0.429	0.537
30	0.243	0.365	0.486	0.608
40	0.263	0.394	0.526	0.657
50	0.278	0.417	0.556	0.696

Then using Table B1.3.3.1(B), the internal design pressures can be determined as follows:

Ceiling Type	$p_{i,u}$ (kPa)
C1 - Non-pressure sealed ceiling	-0.394

Note:
1. Internal pressure will be negative (suction) only for this scenario.

b. Consider an opening in the facade

There are no sliding doors to the exterior and no openings in the façade to consider.

c. Check compliance with AS/NZS1170.2 Clause 5.3.3

Ceilings which do not form a permanent seal shall be designed for a net differential pressure coefficient of 0.3, has been satisfied, as has consideration of Clauses 5.3.1 and 5.3.2.

d. Summary design pressure

The internal pressure used for design will be the larger absolute of the pressures calculated:

Ceiling Type	$p_{i,u}$ (kPa)
C1 - Non-pressure sealed ceiling	-0.394

Step 5:

Determine ceiling framing configuration.

By using Table B2.4.2(B),

Internal pressure derived from step 4 is 0.394 kPa therefore use next closest pressure 0.500kPa.

For 1 layer of 13mm standard plasterboard and 0.500 kPa ceiling pressure the following framing configuration can be used for preliminary design.

Suspension Rod	- Rondo 2.5mm diameter wire hanger Rod at 900mm max centres.
Top Cross Rail	- Rondo #127 TCR at 1200mm max centres.
Furring channel	- Rondo #129 FC at 600mm max centres.

Step 6:

Check whether downstrut is required.

In step 4 we have concluded that there is no positive (uplift) pressure across the ceiling, therefore a downstrut is not required.

Step 7:

Determine Seismic action.

Following parameters are given in the above example.

- Location - Auckland
- Site sub-soil class - C
- Importance level - 2

From Table A3.5.2(B), hazard design factor(Z) for Auckland will be 0.13.

Figure A3.5.2(C) for IL2, Z=0.13 and site sub soil classification C, F_{ph}/W_p will be 1.03g, therefore closest value of 1.00g.

Step 8:

Determine maximum bracing area.

By using table B2.4.2(D),

For 1 layer of 13mm standard plasterboard and F_{ph}/W_p = 1.00, maximum brace area will be 16.2m² for BR2 bracing configuration.

Step 9:

Design summary

Suspension Rod	- Rondo #121 Rod at 900mm max centres
Top Cross Rail	- Rondo #127 TCR at 1200mm max centres
Furring channel	- Rondo #129 FC at 600mm max centres
Downstrut	- N/A
Maximum Brace Area	- 16.2m² for BR1 bracing configuration.

Step 10:

Detail drawings

See section B2.4.3

Step 11:

Installation procedure

See section B2.4.4

B2.4.2(D) PRESSURE RESISTING ONE-WAY BRACED CEILING

The pressure resisting one-way braced ceiling utilises both perimeter fixing and bracing to achieve seismic compliance, couple with downstrutting where the ceiling is exposed to positive pressures causing uplift on the ceiling. Here the ceiling is typically connected to one long side of the passageway using a fixed perimeter connection and is braced in the opposing direction. The width of the passageway will be limited in the same manner as a perimeter fixed ceiling, but the length of the passageway will be unlimited when the bracing is designed and installed accordingly.

SYSTEM LAYOUT

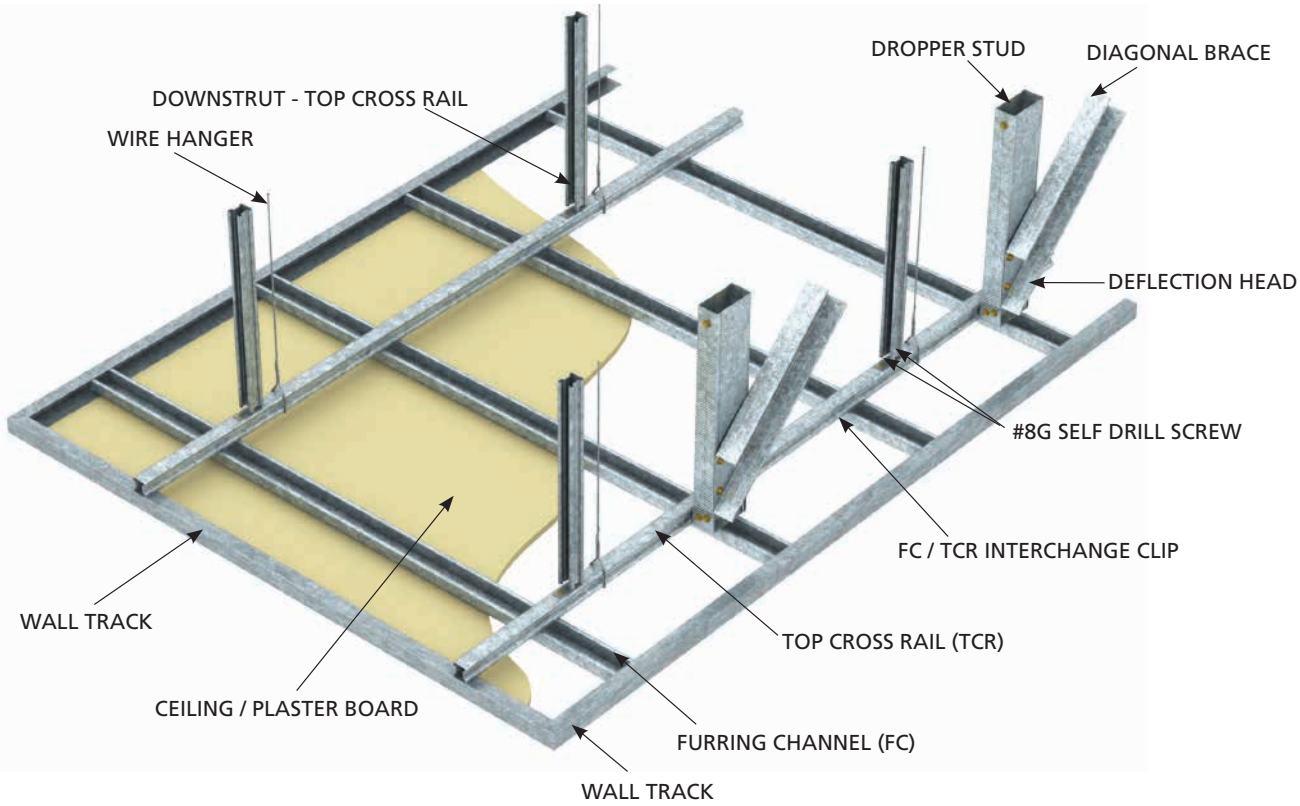

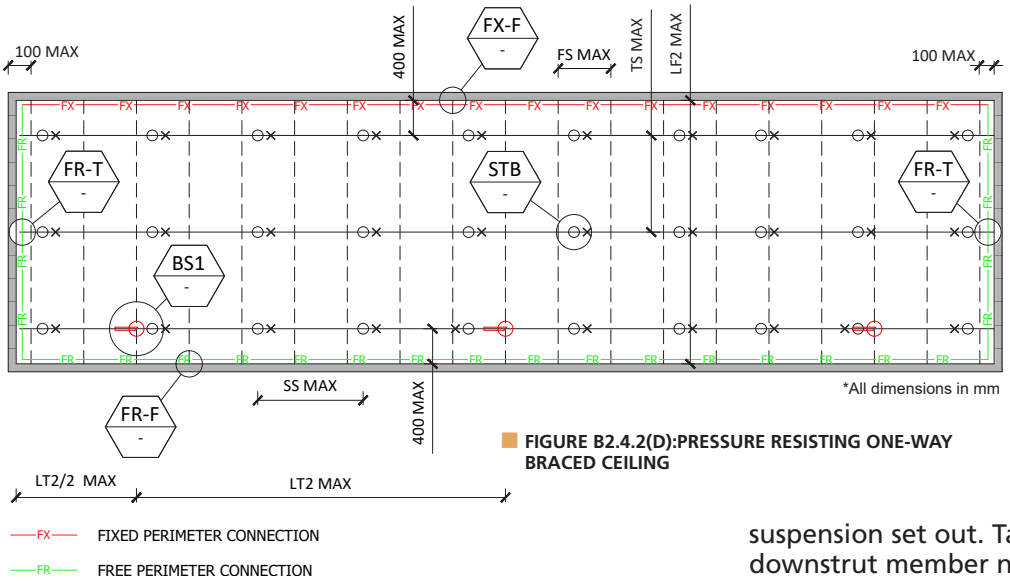

FIGURE B2.4.2(D):PRESSURE RESISTING ONE-WAY BRACED CEILING

TABLE B2.4.2(H): PRESSURE RESISTING ONE-WAY BRACED CEILING COMPONENTS

ITEM	DESCRIPTION		RONDO PARTS OPTIONS
1	Wall Track		141, 559 + 140, 559 + 141, 559 + 142
2	Suspension Rod		121, 122, 2.5mm Diameter Wire Hanger
3	FC/TCR Interchange Clip		119, 139, 159, 238
4	Top Cross Rail		127, 127R, 128, 128R
5	Furring Channel		129, 155, 308, 308R
6	Suspension Rod Bracket	Concrete Substrate	247, 249, 547
		Steel/Timber Substrate	274, 534
7	Suspension Clip		124, 124N, 167, 2534
8	Dropper Stud (Boxed)		112, 491, 495
9	Brace Stud		112, 491, 495
10	Expansion Joint		P35
11	Lining		-

Notes:
1. *Refer Table B2.2 for more detail description of different part numbers.*
2. *Refer Table B2.4.3 for FX-F, FR-T,FR-F, BS1, STB and DS strut details.*

SYSTEM SELECTION

For pressure resisting one-way braced ceilings, the assessment of the ceiling grid generally follows both the perimeter fixed and braced ceiling method as follows:

a. Determine the plenum depth required, and the supporting structure construction (ie; purlins or concrete slab).

b. Refer to Table B2.4.2(A) and select an appropriate downstrut system.

c. Refer to Table B2.4.2(B) to check the appropriate section of the table matching to the design internal pressure previously determined. Scroll across the table to determine the suspended ceiling grid components, the member spans and spacings and the subsequent suspension set out. Take note of the downstrut member nominated.

d. Determine the seismic action applicable for the ceiling using Figure A3.5.2(C).

e. Check the maximum width of the passageway using a perimeter fix design per Table B2.4.2(C1) and (C2).

f. Select a suitable bracing member and determine the maximum ceiling area that can be carried by the brace using Table B2.4.2(D).

g. Layout the bracing on the Reflected Ceiling Plan (RCP) and ensure:

   i. no individual brace exceeds the area limits, and the overall brace limits are satisfied.

   ii. the bracing is laid out uniformly and evenly throughout the ceiling.

   iii. there are no irregularities in the ceiling area likely to compromise the ceiling bracing. If unsure, contact your Rondo representative to clarify.

The design Table B2.4.2(C) and (D) have been prepared based on typical installation details. Accordingly, the ceiling grid is to be installed in accordance with the limitations provided in the Tables, in particular, the ceiling free ends.

DESIGN EXAMPLE

Internal suspended ceiling design is required for a 30m high apartment located in Wellington. The apartment has big sliding doors to the exterior. Ceiling is located 28m above the ground floor and lined with 1 layer of 13mm standard plasterboard. The ceiling is not fire rated and can be considered to be a non-pressure sealed, pressure resisting ceiling. Ceiling plenum depth is 600mm and it is attached to a slab above. Site sub-soil class for earthquake action is C. Importance level of the building has been stated as IL2 in structural notes.

Step 1:

Determine the building parameters for wind and seismic events.

Importance Level - 2

Location - Wellington

Wind Region - NZ3 (Refer Figure A3.3.1(C))

Terrain Category - 3 (Refer Figure A3.3.1(D))

Building Height - 30m

Site sub-soil class - C

Step 2:

Determine whether you can use this manual or need specific design.

By using Figure B1.1.1(B) this manual can be used for the preliminary design.

Step 3:

Determine basic wind pressure (p_u).

The building is greater than 25m in height, therefore the floor height shall be used (refer figure A3.4.2.1(C)) to determine the basic pressure from Table A3.4.2(B).

For Region NZ3, IL = 2, TC =3 and Floor height = 28m, using linear interpolation.

p_u = 1.646kPa

Step 4:

Determine the internal pressure coefficient ($C_{p,i}$) and the design internal pressure (pi) on the ceiling for ULS.

a. Consider façade leakage

When considering the façade leakage scenario, it is assumed all doors and windows are closed and the Ultimate Limit State wind speed is used to determine the resulting internal ultimate design pressure ($p_{i,u}$).

With reference to Figure B1.3.3(E), and assuming an equally permeable façade, the internal pressure coefficients will be $C_{p,i}$ = -0.3 or +0.3.

REGION NZ3 - IMPORTANCE LEVEL 2				
FLOOR HEIGHT	TERRAIN CATEGORY 3			
	$C_{p,n}$			
z (m)	0.2	0.3	0.4	0.5
10	0.232	0.348	0.464	0.581
20	0.298	0.447	0.596	0.745
30	0.337	0.506	0.674	0.843
40	0.365	0.547	0.729	0.911

Then using Table B1.3.3.1(A), the internal design pressures can be interpolated as follows:

Ceiling Type	$p_{i,u}$ (kPa)
C1 - Non-pressure sealed ceiling	0.494

Notes:
1. Internal pressure will be positive (uplift) or negative (suction).

b. Consider an opening in the facade

Dominant openings in the facade only effect the net pressure coefficients applicable to pressure sealed, pressure resisting ceilings such as fire rated ceilings. This example relates to a non-pressure sealed, pressure resisting ceiling, therefore step 4b is not required.

c. Check compliance with AS/NZS1170.2 Clause 5.3.3

Ceilings which do not form a permanent seal shall be designed for a net differential pressure coefficient of 0.3, has been satisfied.

d. Summary design pressure

The internal pressure used for design will be the larger absolute value of the pressures calculated in step 4:

Ceiling Type	$p_{i,u}$ (kPa)
C1 - Non-pressure sealed ceiling	+0.494/-0.494

Step 5:

Determine ceiling framing configuration.

Refer Table B2.4.2(B), and the peak pressure determined above (0.494kPa)rationalized to the nearest next design pressure of 0.50kPa and using 13mm standard plasterboard lining.

Suspension Rod	- Rondo #121 Rod at 900mm max centres.
Top Cross Rail	- Rondo #127 TCR at 1200mm max centres.
Furring channel	- Rondo #129 FC at 600mm max centres.

Step 6:

Check whether downstrut is required.

As the ceiling is subject to positive pressures downstrutting of the ceiling is required at every suspension point.

Downstrut	- Rondo #127 TCR or #112 at every suspension point.

Note:
Downstruts may not be required in all circumstances, for example, when a key-lock ceiling shares a common plenum space with an exposed tile grid ceiling. Refer to B1.3.3 or Rondo for further confirmation.

Step 7:

Determine Seismic action.

Following parameters are given in the above example.

- Location - Wellington
- Site sub-soil class - C
- Importance level - 2

From table A3.5.2(B), the hazard design factor (Z) for Wellington will be 0.40.

By referring Figure A3.5.2(C) for IL2, Z=0.40 and site sub soil classification C, $F_{ph}/W_p = 3.19g$.

Step 8:

Determine maximum corridor width.

By using Table A3.5.2(C), 13mm standard plasterboard lining and adopting $F_{ph}/W_p = 3.20$.

By using table B2.4.2(C1) maximum corridor width will be 2.5m.

Step 9:

Determine maximum brace area.

By using table B2.4.2(D), and using BR2.

For 13mm standard plasterboard lining, $F_{ph}/W_p = 3.20g$ and BR2 the maximum brace area will be $5.4m^2$ can be linearly interpolated between 2.0g and 3.6g.

Step 10:

Design summary

Suspension Rod	- 2.5mm diameter wire hanger at 900mm max centres
Top Cross Rail	- Rondo #127 TCR at 1200mm max centres
Furring channel	- Rondo #129 FC at 600mm max centres
Downstrut	- Rondo #127 TCR at every suspension point
Maximum Corridor width	- 2.5m
Maximum Brace area	- $5.4m^2$

Step 11:

Detail drawings

See section B2.4.3

Step 12:

Installation procedure

See section B2.4.4

B2.4.3 STANDARD DETAILS

TABLE B2.4.3(A): STANDARD WALL TRACK DETAILS

WALL TRACK FIXING TO WALLS			
WT (a) - Stud Wall (fixed end)	*WT (b) - Stud Wall (free end)*	*WT (c) - Timber Wall (fixed/free end)*	*WT (d) - Concrete Wall (fixed/free end)*
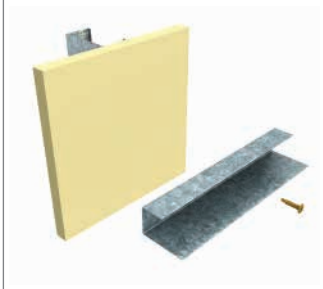			
140/141/142, 1#10G Screw	*140/141/142 1#8G Screw*	*140/141/142 1#12G Type 17 Wood Screw*	*140/141/142 1/CH06*

Notes:
For fixed end connections, the above details only show the initial fixing of the perimeter track.
Refer to Table B2.4.3(D) below for complete installation of fixed end connection.

TABLE B2.4.3(B): SUSPENSION BRACKET TO PRIMARY STRUCTURE DETAILS

SUSPENSION ROD TO PRIMARY STRUCTURE			
ST (a)	*ST (b)*	*ST (c)*	*ST (d)*
			
1/HUS3-H6, 247, 2.5mm Wire Hanger, 121, 122	*1/HUS3-H6, 547, 121, 122*	*2#12G Screw, 534, 121*	*2#12G Screw, 274, 2.5mm Wire Hanger, 121, 122*

Notes:
Configurations shown for fixing to concrete are suitable for seismic C1 applications only.

TABLE B2.4.3(C): STANDARD TCR SUSPENSION DETAILS

SUSPENSION ROD TO TCR

SB (a)	SB (b)	SB (c)	SB (d)
		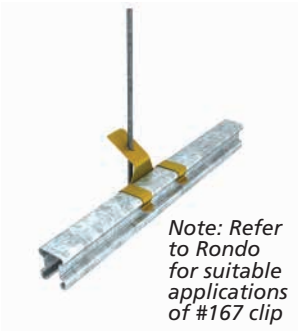 Note: Refer to Rondo for suitable applications of #167 clip	
121, 2534, 127/128	122, 124N, 127/128	121, 167, 127/128	2.5mm Dia. Wire Hanger, 127/128

TABLE B2.4.3(D): STANDARD FIXED PERIMETER CONNECTION DETAILS

FIXED PERIMETER CONNECTIONS - SQUARE SET

FX-F - Fixed FC Connection



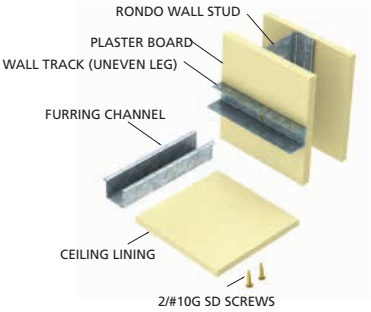

NOTE: FC MUST BE HARD UP AGAINST THE WALL TRACK

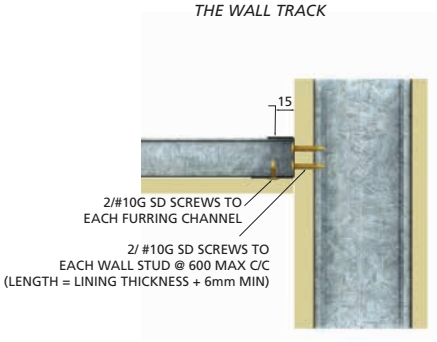

140/141/142, 129/308, 2/#10G Screw, 2/#10G SD Screws

FIXED PERIMETER CONNECTIONS - SQUARE SET

FX-F - Fixed FC Connection (HIGH STRENGTH)

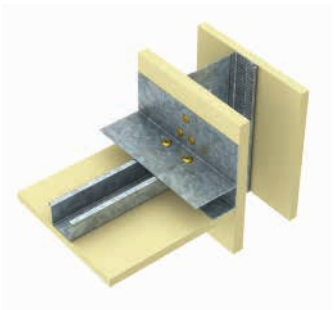

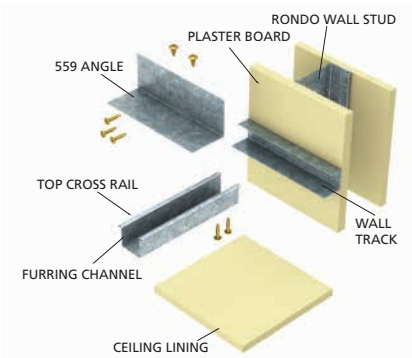

NOTE: FC MUST BE HARD UP AGAINST THE WALL TRACK

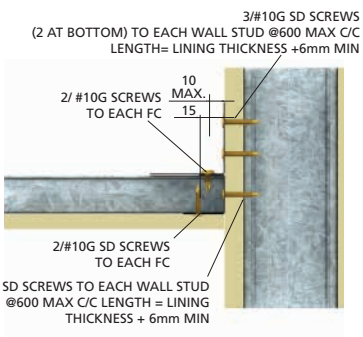

559, 140/141/142, 125/127/128, 3/#10G SD Screw (2 at bottom), 2/#10G SD Screw, 1/8G SD Screw, 2/#10G SD Screw

TABLE B2.4.3(D): STANDARD FIXED PERIMETER CONNECTION DETAILS (CONTINUED)

FIXED PERIMETER CONNECTIONS - SQUARE SET

FX-T - Fixed TCR Connection

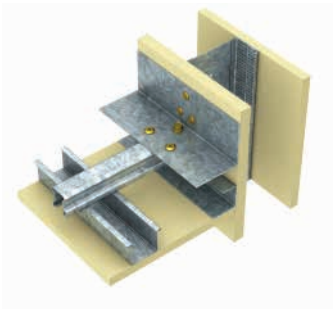

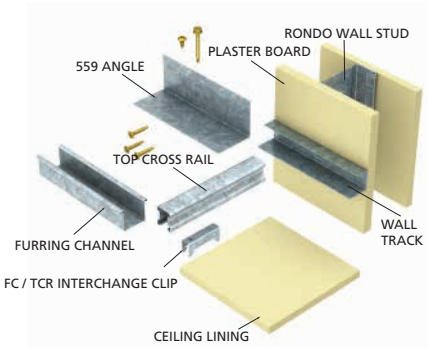

NOTE: TCR MUST BE HARD UP AGAINST THE WALL LINING

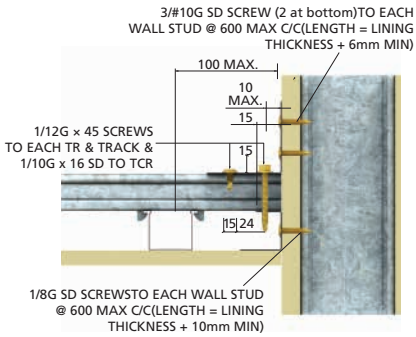

559, 140/141/142, 125/127/128, 3/#10G SD Screw (2 at bottom), 12G x 45 HEX HD SD Screw + 10G SD Screw, 1/10G SD Screw

FIXED PERIMETER CONNECTION - SHADOWLINE SET

FX-F - Fixed FC Connection

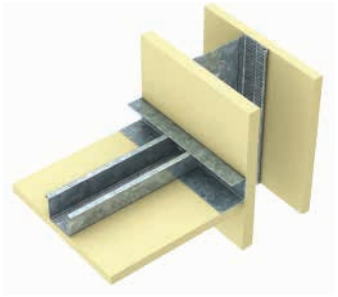

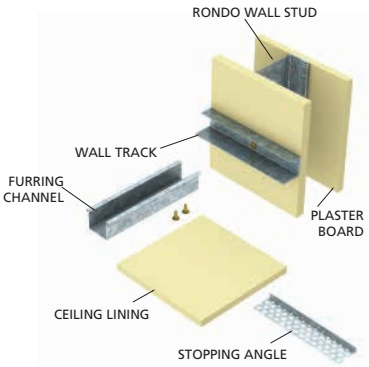

NOTE: FC MUST BE HARD UP AGAINST THE WALL TRACK

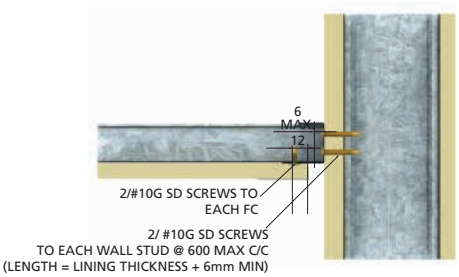

140/141/142/143, 129/308, P25/P26/P27/P28, 2/#10G Screw, 1/#8G Screw

FIXED PERIMETER CONNECTION - SHADOWLINE SET

FX-F Fixed FC Connection (HIGH STRENGTH)

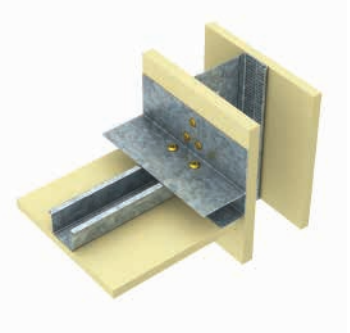

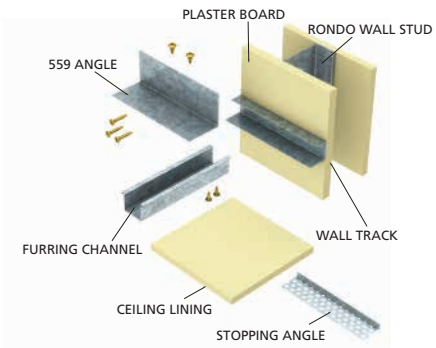

NOTE: FC MUST BE HARD UP AGAINST THE WALL TRACK

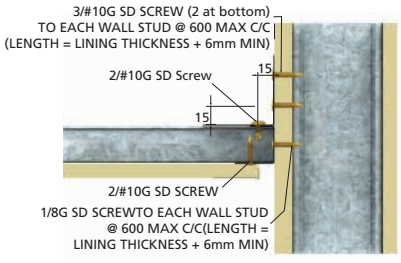

559, 140/141/142, 125/127/128, 139, 129/308, P25/P26/P27 or P28, 3/#10G SD Screw (2 at bottom), 2/#10G SD Screw, 1/8G SD Screw, 2/#10G SD Screw

TABLE B2.4.3(D): STANDARD FIXED PERIMETER CONNECTION DETAILS (CONTINUED)

FIXED PERIMETER CONNECTION - SHADOWLINE SET

FX-T - Fixed TCR Connection

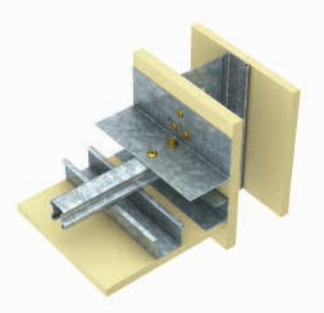

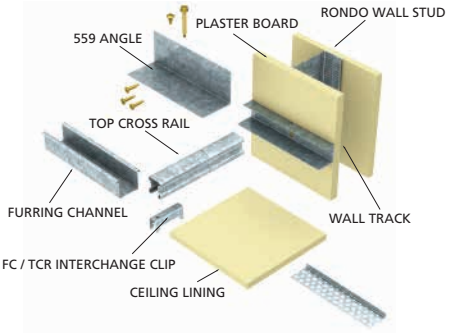

NOTE: TCR MUST BE HARD UP AGAINST THE WALL LINING

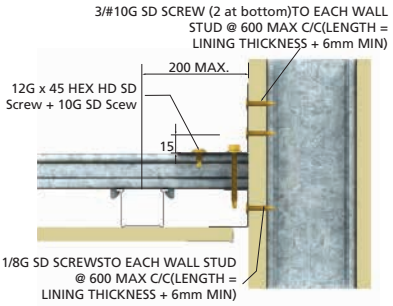

559, 140/141/142, 125/127/128, 139, 129/308, P25/P26/P27 or P28, 3/#10G SD Screw (2 at bottom), 12G x 45 HEX HD SD Screw + 10G SD Screw, 1/10G SD Screw

TABLE B2.4.3(E): STANDARD FREE PERIMETER CONNECTION DETAILS

FREE PERIMETER CONNECTIONS - SQUARE SET

FR-F - Free FC Connection

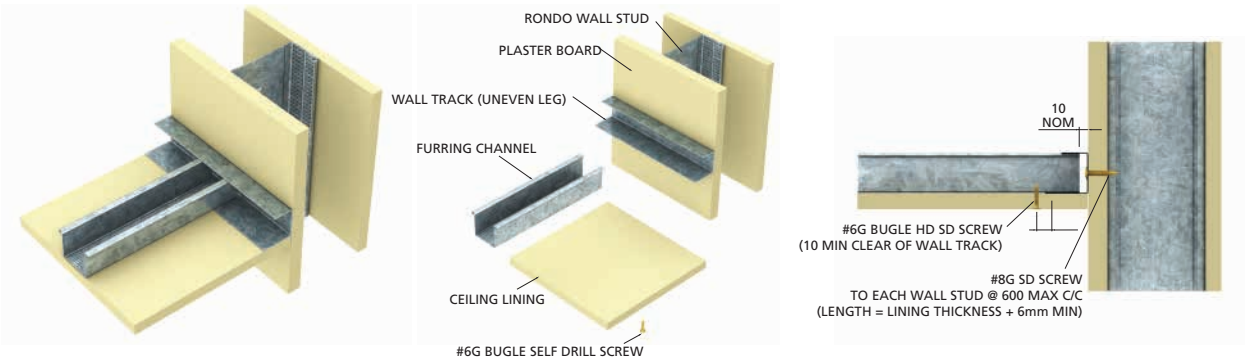

140 or 141 or 142, 129 or 308, 1/#8G Screw, 1/#6G Screw

FREE PERIMETER CONNECTIONS - SQUARE SET

FR-T - Free TCR Connection

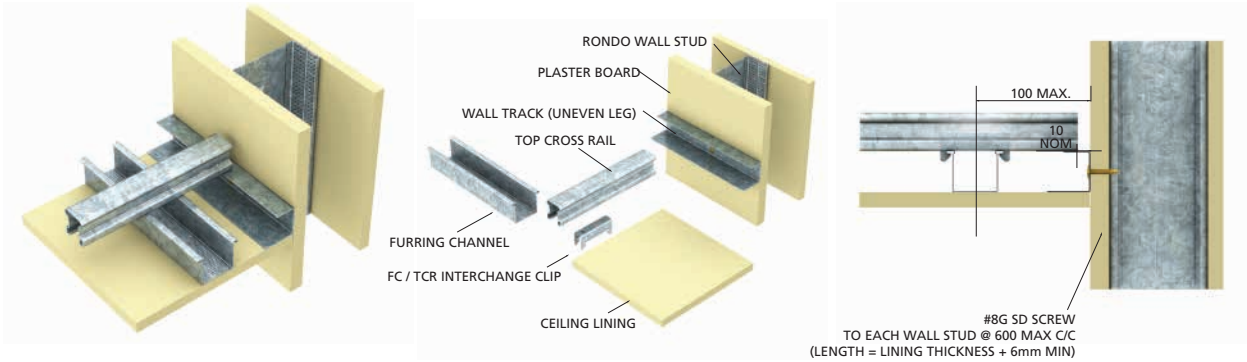

140 or 141 or 142, 125 or 127 or 128, 139, 129 or 308, 1/8G Screw

FREE PERIMETER CONNECTION - SHADOWLINE SET

FR-F - Free FC Connection

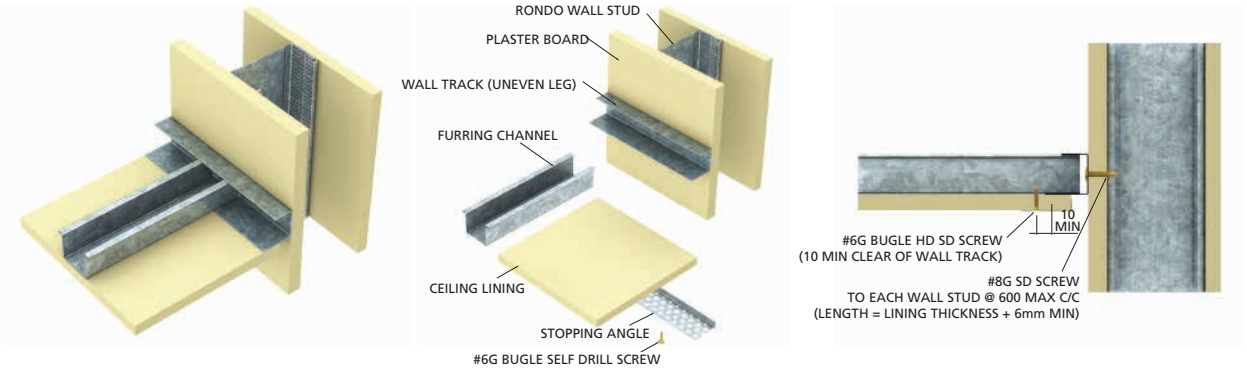

140 or 141 or 142, 139, 129 or 308, P25 or P26 or P27 or P28, 1/#8G Screw, 1/#6G Screw

■ **TABLE B2.4.3(E): STANDARD FREE PERIMETER CONNECTION DETAILS (CONTINUED)**

FREE PERIMETER CONNECTION - SHADOWLINE SET

FR-T - Free TCR Connection

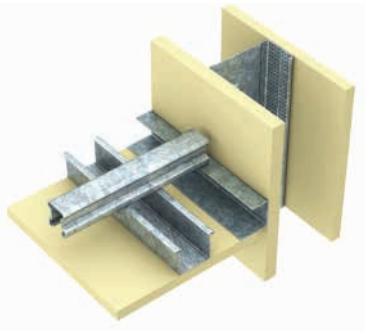

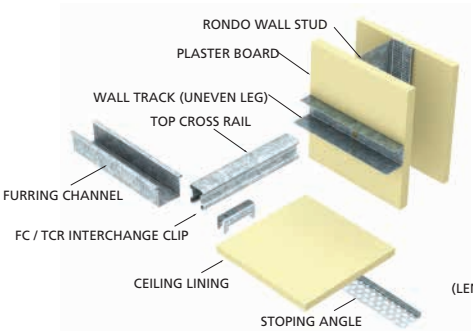

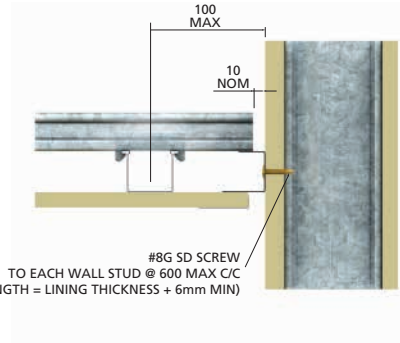

140 or 141 or 142, 125 or 127 or 128, 139, 129 or 308, P25 or P26 or P27 or P28, 1/#8G Screw

■ **TABLE B2.4.3(F): SEISMIC JOINT DETAILS**

SEISMIC JOINT - PARALLEL TCR

SJ1

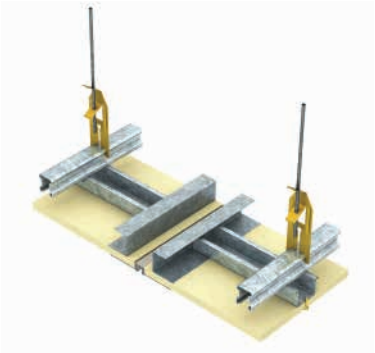

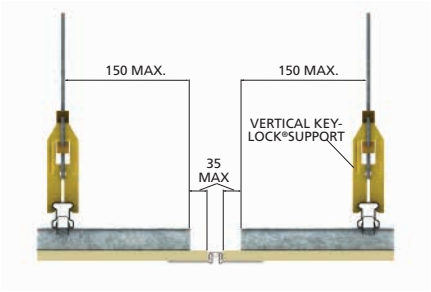

140/141/142, P35, 2/#8G Screw

SEISMIC JOINT - PARALLEL TO FC

SJ2

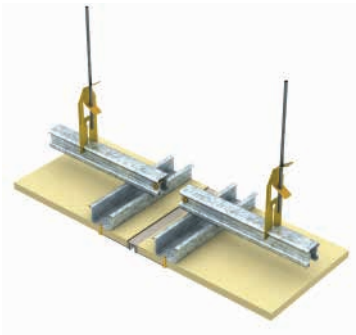

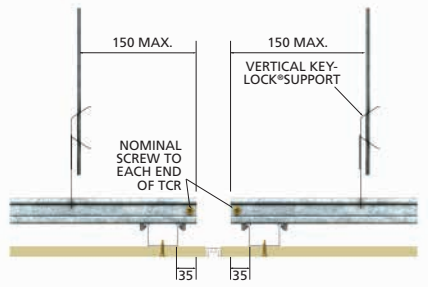

P35, 2/8G Screw

TABLE B2.4.3(G): SPLICE JOINT DETAILS

SPLICE JOINT – FC

SPF

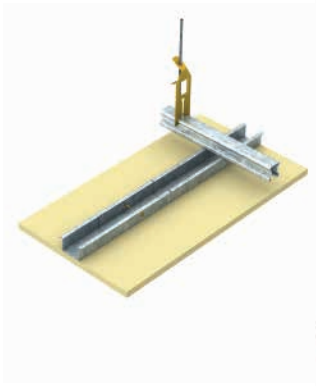

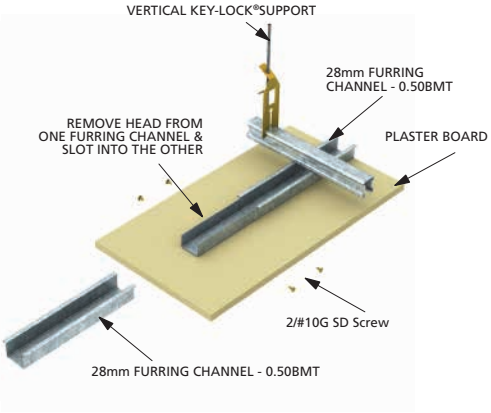

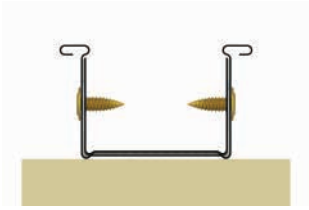

TCR SPACING	MAX DISTANCE "X"
600	150
900	225
1200	300

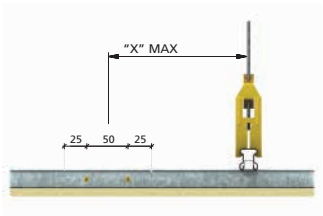

129, 2/#8G Screw

SPLICE JOINT - TCR

SPT

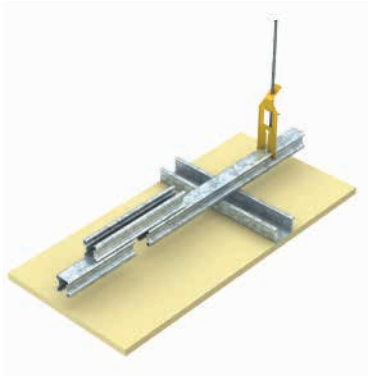

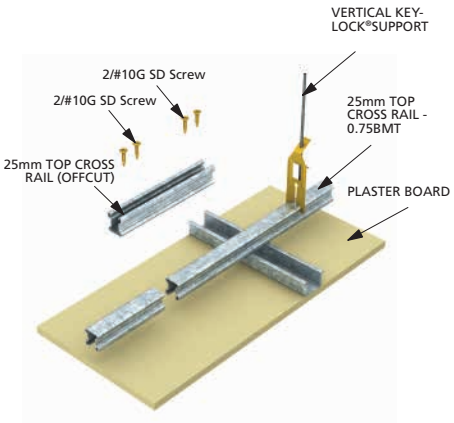

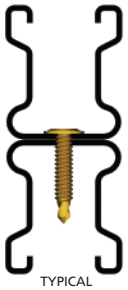

TCR SPACING	MAX DISTANCE "X"
600	150
900	225
1200	300
1500	375

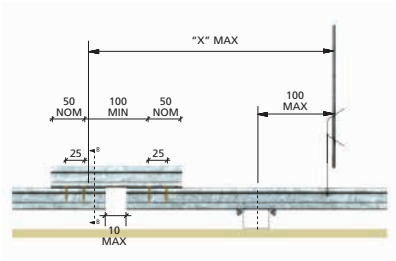

127/128, 2/#8G Screw

TABLE B2.4.3(H): DOWNSTRUT DETAILS

DOWNSTRUT				
DS1 - TCR to Concrete Substrate (Plenum depth 230-1000)			*DS2 - Stud to Concrete Substrate (Plenum depth 1000-2000*	*DS3 - Tophat to Steel Substrate (Plenum depth 200-2000)*
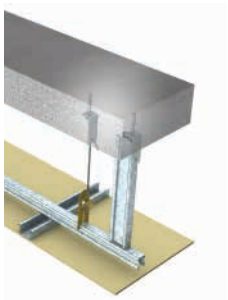			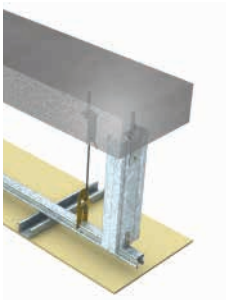	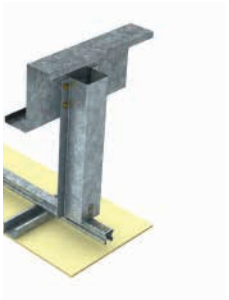
DS1(A)	*127*	*249, 188, 1/HILTI HUS3 H6, 6/#8G Screw*	*112, 249, 188, 1/HUS3 H6, 6/#8G Screw*	*M535, 188, 4/#8G Screw, 4/#12G Screw*
DS1(B)	*128*			

TABLE B2.4.3(I): TYPICAL BRACING DETAILS - TWO-WAY BRACING OPTION

TWO-WAY BRACING					
TBR 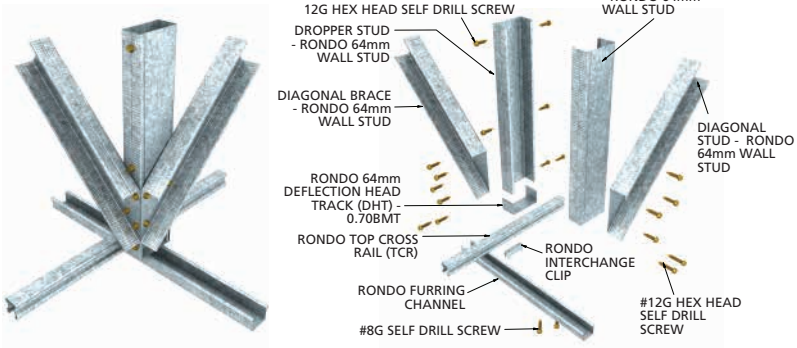		*DROPPER STUD*	*BRACE STUD*	*TRACK OFFCUT*	*SCREWS*
	TBR1	*112 (BOXED)*	*2/112*	*497*	*14/#12G SCREWS*
	TBR2	*491 (BOXED)*	*2/491*	*497*	*14/#12G SCREWS*
	TBR3	*495 (BOXED)*	*2/495*	*499*	*14/#12G SCREWS*

TABLE B2.4.3(J): TYPICAL BRACING DETAILS - ONE-WAY BRACING OPTION

ONE-WAY BRACING					
OBR 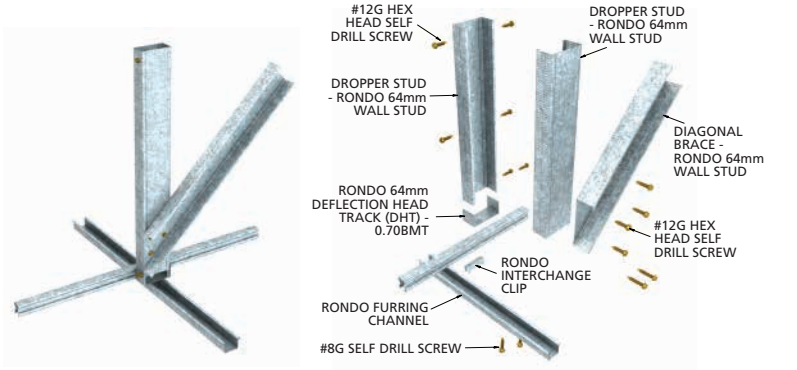		*DROPPER STUD*	*BRACE STUD*	*TRACK OFFCUT*	*SCREWS*
	TBR1	*112 (BOXED)*	*1/112*	*497*	*10/#12G SCREWS*
	TBR2	*491 (BOXED)*	*1/491*	*497*	*10/#12G SCREWS*
	TBR3	*495 (BOXED)*	*1/495*	*499*	*10/#12G SCREWS*

TABLE B2.4.3(K): DROPPER STUD CONNECTION DETAILS

DROPPER STUD CONNECTION		
To Concrete	*To Purlin*	*To Purlin Bridging*
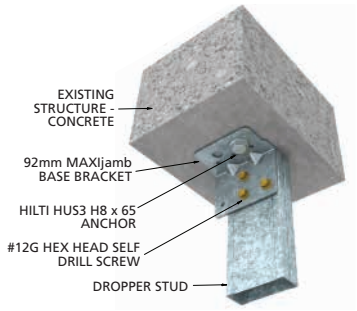	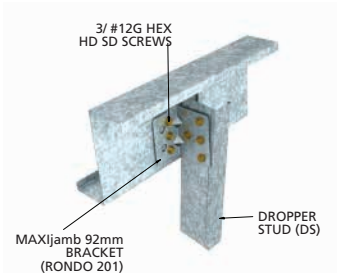	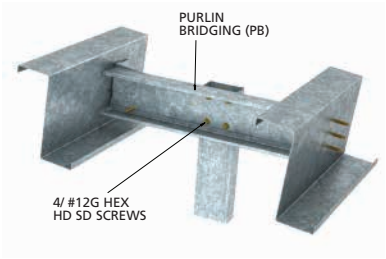
201 Bracket, 3/#12G Screws, HILTI HUS3 H8 x 65 Anchor	*201 Bracket, 7/#12G Screws*	*495, 4/#12G Screws*

TABLE B2.4.3(L): BRACE STUD CONNECTION DETAILS

BRACE STUD CONNECTION		
To Concrete	*To Purlin*	*To Purlin Bridging*
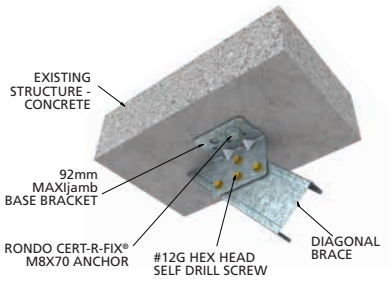	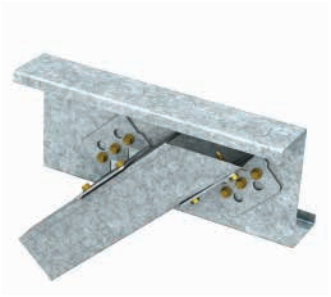	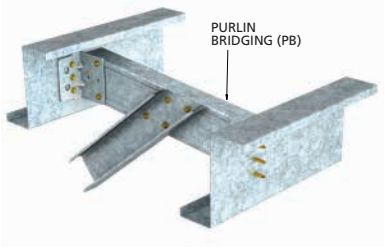
201 Bracket, 4/#12G Screws, 1/HILTI HUS4-H8X65 Anchor	*2/201 Bracket, 10/#12G Screws*	*495, 4/#12G Screws*

TABLE B2.4.3(M): BRACE STUD CONNECTION DETAILS

DROPPER STUD TO GRID CONNECTION	
Br1 Bracing	*Br2 And Br3 Bracing*
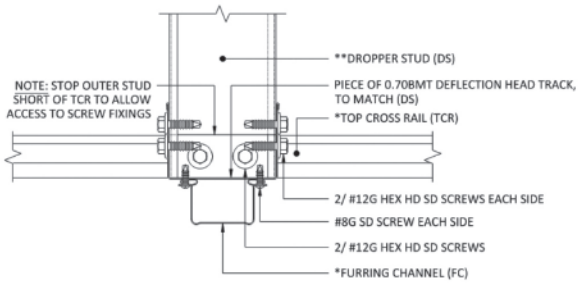	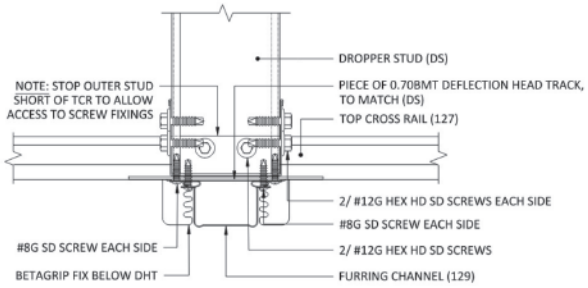
40mm OFFCUT DHT, 2/#12G Screws Each Side, FC fixed with #8G Wafer Head Screws to DHT	*40mm OFFCUT DHT, 2/#12G Screws Each Side, FC fixed with #8G Wafer Head Screws to DHT + Betagrip BG01*

B2.4.4 INSTALLATION

INSTALLATION SUMMARY

Figure B2.4.4(A) below provides an overview of the installation procedure for a typical vented perimeter fixed ceiling. This ceiling is detailed in Figure B2.4.1(A), and is presented as a general guide only. Where variations in the ceiling construction are possible, they will be detailed separately.

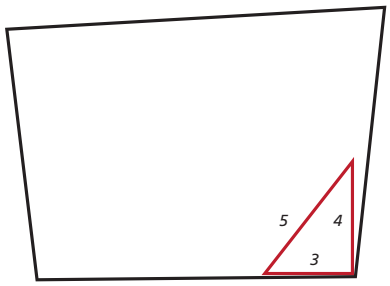

1. Check room squareness

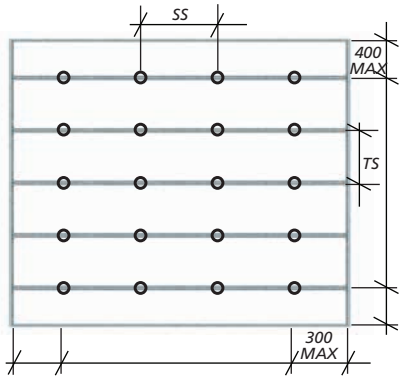

2. Plan the ceiling grid

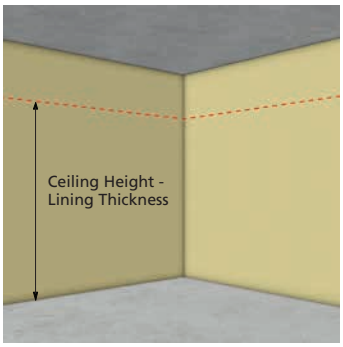

3. Mark ceiling height around perimeter wall

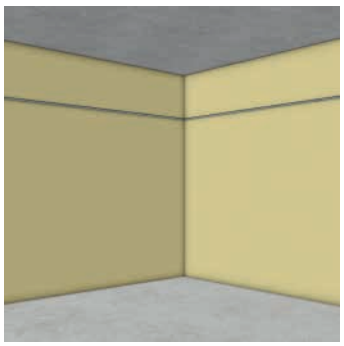

4. Install Wall Track

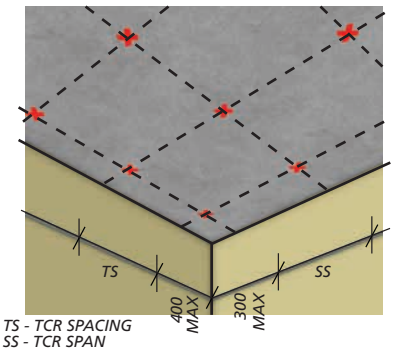

5. Mark Hanger Location

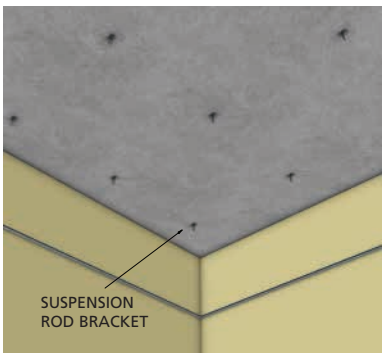

6. Fix suspension rod brackets for suspension rod

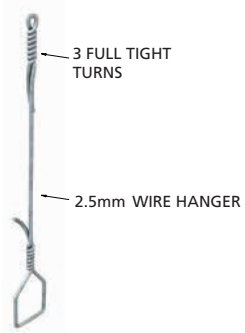

7. Secure 2.5mm Wire Hanger to 247 Bracket with 3 full tight turns

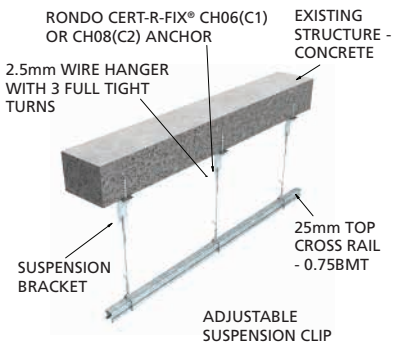

8. Align suspension wire assembly

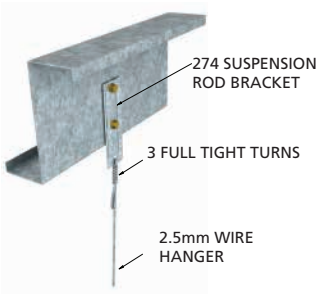

9. Secure wire hanger to top cross rail with 3 full tight turns

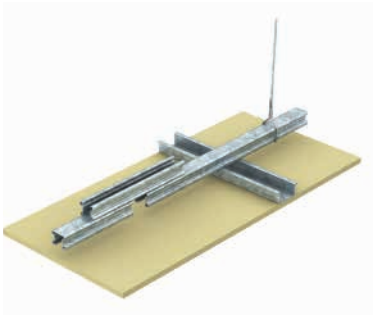		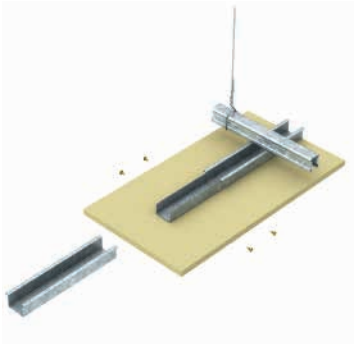
10. TCR splice joint	*11. Fix furring channel*	*12. FC spice joint*
	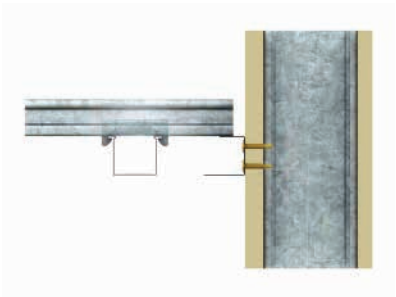	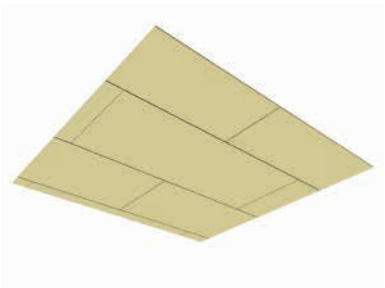
13. Check final levelling	*14. Install perimeter trim as per architctural drawing*	*15. Install lining*

FIGURE B2.4.4(A): VENTED ONE-WAY BRACED CEILING

Notes:
1. *Install downstrut after step 12 if the ceiling is resisting uplift pressure.*
2. *Install bracing members after step 12 if it is braced ceiling.*
3. *Install seismic joint if it is seismic jointed ceiling.*

INSTALLATION PROCEDURE

Step 1: Preliminaries

(1) The ceiling area should be checked to ensure it ready to proceed with installation including, but not limited to:

(1.1) The building's façade is functionally completed, and the area is weatherproof.

(1.2) The walls are square, parallel and plumb and have been constructed to plan.

(1.3) Visually check the structure that will support the ceiling grid to ensure it is complete and to assess suspension points.

Step 2: Plan The Ceiling Grid

(2) Based on the room size and edge distance plan the ceiling grid.

(2.1) Ensure that the first hanger will not be more than 300mm from the TCR end and the first TCR will be no more than 400mm from the wall in the FC direction.

(2.2) Check for critical lighting conditions based on the grid and lining direction.

(2.3) For purlin suspension, ensure the TCR is running perpendicular to the roof purlins, and the purlin spacing is consistent with the ceiling design.

Never run the TCR parallel with the roof purlins, floor joists or similar supporting members without first checking with Rondo.

(2.4) Take note of any Access Panels, columns, lighting or other services and coordinate as necessary with the ceiling grid to avoid cutting the framing members.

Step 3: Mark Ceiling Height Around The Perimeter Wall

(3) Mark the finished ceiling height on the wall, as specified on the Architectural plans.

(3.1) Transfer this set point to all other walls using a laser or other acceptable means.

Step 4: Install Wall Track

(4) Install the wall track as follows:

(4.1) Ensure the wall track is consistent with the ceiling design.

(4.2) Cutting the wall track should be minimised as much as possible.

(4.3) Fix the wall track to the framing members of the perimeter walls, aligning the wall track with the set out marked previously. Refer Table B2.4.3(A) for standard details and additional information.

(4.4) Wall track fixings to be as follows:

a. to concrete, refer section A5.1.1

b. to structural steel, refer section A5.1.2

c. to timber, refer section A5.1.3

(4.5) The first fixing to the wall track should be no more than 100mm from the end and thereafter , the fixings need to be spaced at not more than 600mm centres.

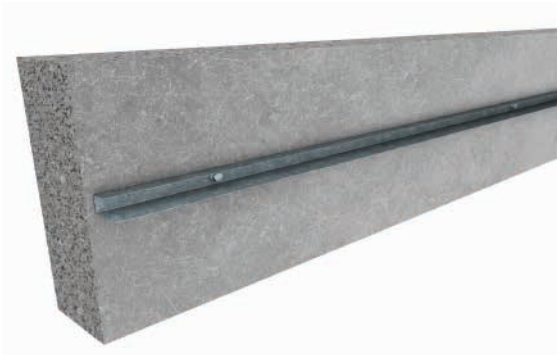

FIGURE B2.4.4(B): WALL TRACK TO CONCRETE WALL

Step 5: Mark Hanger Bracket Position

(5) Mark suspension hanger brackets in the specified grid pattern.

(5.1) Ensure the suspension set out matches to the design span and spacing of the TCR.

(5.2) Ensure the suspension set out is straight, consistent and uniform throughout the ceiling area.

(5.3) suspension should be vertical and plumb to prevent side loading to TCR.

(5.4) Allow for bridging to services or other obstructions that prevent the suspension being located at the correct set out. Alternatively, the ceiling grid may be shifted to avoid the conflict however; the span and spacing of the TCR is not to increase.

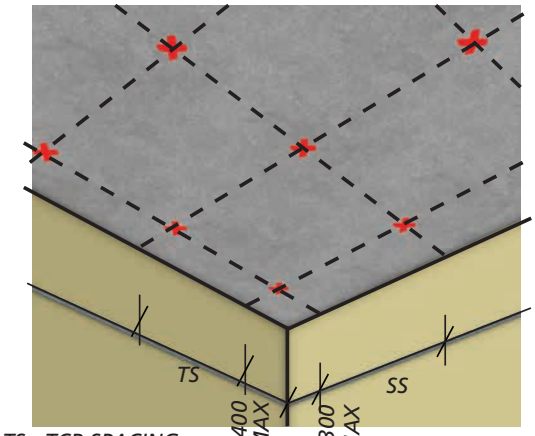

FIGURE B2.4.4(C): FIRST SUSPENSION POINT

Step 6: Install The Supspension Brackets

(6) Select the suspension bracket consistent with the structure to which it will be attached, refer Table B2.4.3(B).

(6.1) To a concrete soffit use the 249 Bracket with either the 2.5mm diameter wire hanger, 121 plain rod, 122 threaded rod.

For fixings to concrete refer section A5.1.1 of Rondo Design Data A NZ for design limitations.



FIGURE B2.4.4(D): 249 SUSPENSION ROD BRACKET TO CONCRETE SOFFIT

(6.2) To steel purlins or the like, the 534 brackets can be used in conjunction with the 121 plain rod, and the 274 bracket can be used with both the 121 plain rod and 122 threaded rod.

For fixings to steel refer section A5.1.2.

(6.3) When fixing to roof purlins, never suspend the ceiling from the lip of the purlin as this introduces torsion into the purlin and could potentially cause premature failure.

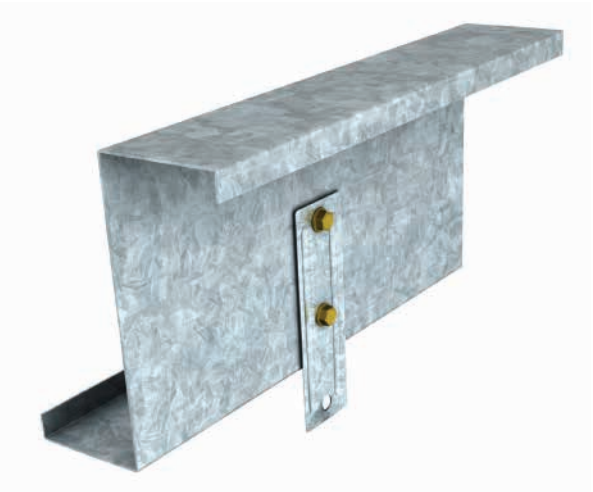

FIGURE B2.4.4(E): 274 SUSPENSION ROD BRACKET TO STEEL Z PURLIN

(6.4) To timber, the 534 brackets can be used in conjunction with the 121 plain rod, and the 274 bracket can be used with 121 plain rod, 122 threaded road and 2.5mm diameter wire hanger.

For fixings to timber refer section A5.1.3.

(6.5) When fixing to timber, never fix to the underside of the timber as this can result in screw pullout.

Step 7: Install Suspension Wire

(7) Cut the 2.5mm wire hanger to the required length.

(7.1) Secure one end of 2.5mm wire hanger to 247 or 274 suspension brackets by twisting the end of the wire back around itself with a minimum of three full, tight turns.



FIGURE B2.4.4(F): 2.5mm WIRE ATTACH TO 274 BRACKET WITH 3 FULL TIGHT TURNS



FIGURE B2.4.4(G): 2.5mm WIRE ATTACH TO 274 BRACKET WITH 3 FULL TIGHT TURNS

Step 8: Level Suspension Rod Assembly

(8) Adjust all suspension assemblies to the correct level using a string line, laser or other suitable means.





FIGURE B2.4.4(J): LEVEL SUSPENSION ASSEMBLIES

Step 9: Secure The Top Cross Rails (TCR)

(9) Ensure the selected Top Cross Rail (TCR) is in accordance with the design, and install as follows:

(9.1) Allow one end of the TCR to sit on the perimeter wall channel.

(9.2) At the opposing end of the TCR, secure the TCR using 2.5mm wire hanger with 3 full tight turns.



FIGURE B2.4.4(K): TCR SECURED TO SUSPENSION CLIP

(9.3) Repeat the above, working back towards the perimeter wall.

(9.4) Once all clips are secured, check the TCR offset from the perimeter wall is in accordance with the design for a fixed or free end as appropriate.

(9.5) Ensure the suspension assemblies are plumb when the TCR is allowed to settle in its suspended position.

If the suspension is not plumb, the suspension assembly may be gently nudged along the TCR until properly aligned.

(9.6) When installing the following TCR there should be no more than a 10mm gap between abutting TCR.

Step 10: TCR Splice Joint

(10) For correct seismic installation, the TCR splice joint needs to be rigidly fixed to allow the seismic actions to be transferred back to the structure. The TCR splice joint is to be made as follows:

(10.1) Ensure there is no more than a 10mm gap between the ends of the TCR, and the TCR can be aligned without pulling or causing misalignment of the suspension assembly.

(10.2) Using a TCR joiner or off cut, place the joiner on top of the suspended TCR so they sit flat, top to top.

(10.3) Support the TCR and install 4/#10G screws through TCR bodies.

(10.4) Repeat step 10.3 for the adjacent side.

(10.5) Ensure all joints are staggered throughout the ceiling for stability, and to prevent progressive collapse of the ceiling in the event one suspension may be lost.

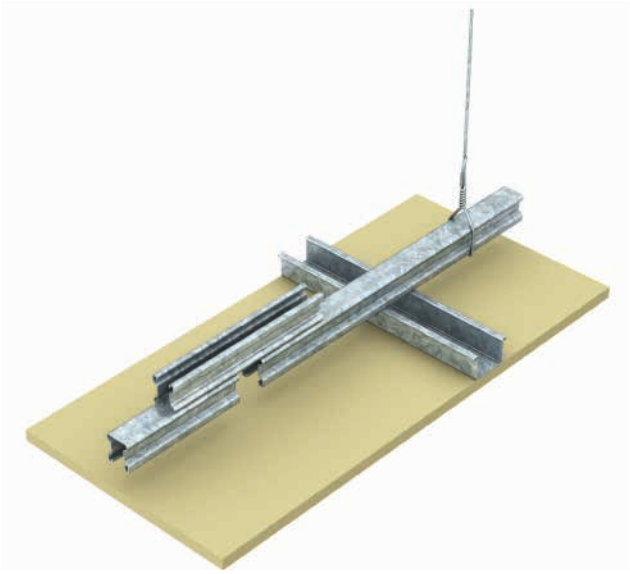

FIGURE B2.4.4(L): TCR SPLICE JOINT

(10.6) The TCR spliced should be located not greater than 300mm from a suspension point.

Step 11: Fixing Furring Channel (FC)

(11) Once all the TCR are in position the furring channel can be installed as follows:

(11.1) Sit one end of the furring channel in the perimeter trim, and maintain the correct clearance as per the design for a fixed or free end as appropriate.

(11.2) Lock one side of the Rondo Interchange Clip 139 over the head of the furring channel.

(11.3) Gently squeeze the furring channel sides together to allow the interchange clip to roll over the furring channel head and lock into position.

(11.4) Align the interchange clip with the TCR previously installed such that it can be installed into the TCR without pulling or causing the suspension assembly to be misaligned. The interchange clip can be readily slid along the furring channel once the side of the furring channel are squeezed together.

Never use mechanical or other means to install these products. If you cannot assemble by hand, there is possibly something amiss.

(11.5) Bring the furring channel up into position and slide the interchange clip up into the TCR.

(11.6) Push upwards firmly, whilst supporting the TCR, ensuring both sides of the interchange clip engage with the TCR. This is evident by an audible "CLICK-CLACK" as the TCR opens and closes onto the interchange clip support lugs.

(11.7) The Interchange Clip is to be fitted at each furring channel / TCR intersection point and the furring channels are to be installed in accordance with the design.

(11.8) The Rondo design does not consider the ceiling linings, except in the determination of system weights, so it is important to also check the board manufacturer's recommendations are aligned with the Rondo design.

Notwithstanding this, at no time should the furring channel be spaced at more than 600mm centres unless specifically designed accordingly.

(11.9) When starting a new run of furring channels, start with a cut length of furring channel such that the furring channel splice joints are staggered throughout the ceiling area.

Step 12: FC Splice Joint

(12) For correct seismic installation, the furring channel splice joint needs to be rigidly fixed to allow the seismic actions to be transferred back to the structure. The furring channel splice joint is to be made as follows:

(12.1) At the furring channel splice joint, one end of the furring channels is notched to allow it to nest into the abutting furring channel so the furring channel needs to be positioned such that there will be a minimum of 100mm overlap between the two sections.

(12.2) Cut the lip for approximately 100mm from one end of the furring channel, and sit the cut end inside the abutting furring channel.

(12.3) Install 2/#10G screw through each side of the nested furring channels.

(12.4) Ensure all joints are staggered throughout the ceiling for stability, and to prevent progressive collapse of the ceiling.

(12.6) The furring channel splice should be located not greater than 200mm from a TCR.

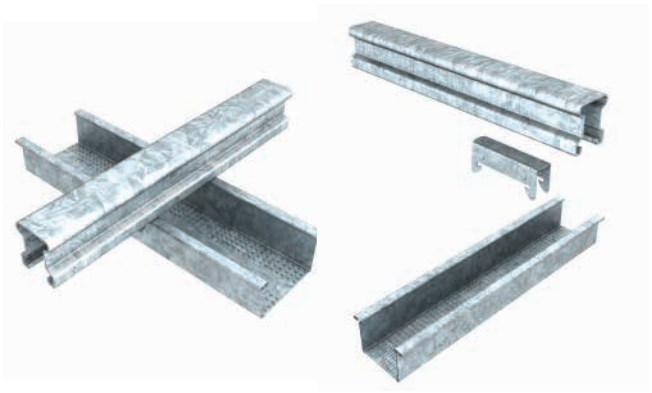

FIGURE B2.4.4(M): FIXING FC TO TCR

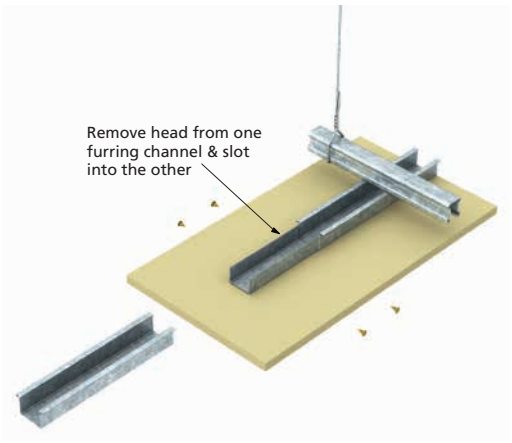

FIGURE B2.4.4(N): FC SPLICE JOINT

Step 13: Check The Final Levelling

(13) When all the ceiling grid is installed, the ceiling should be levelled using a string line, laser level or similar as appropriate.

(13.1) The Rondo suspension clips are either spring or threaded systems and can be adjusted and levelled by either squeezing the locking tabs and sliding the clips or adjusting the locking nut for the threaded systems.

(13.2) The ceiling level is to be set in accordance with the architectural plans.

Step 14: Installing Lining

Prior to installing the ceiling linings, downstrutting and / or bracing of the ceiling grid should be completed as per the steps 16 and 17 if required.

(14) Install the ceiling linings as per the manufacturer's specifications. Refer Rondo for standard ceiling penetration framing for access panels or similar.

For plasterboard, the long length of the board is to be installed perpendicular to the furring channels.

Step 15: Perimeter Finishes

(15) The ceiling perimeters shall be finished in accordance with the architectural specification and install appropriate perimeter trim as shown below.

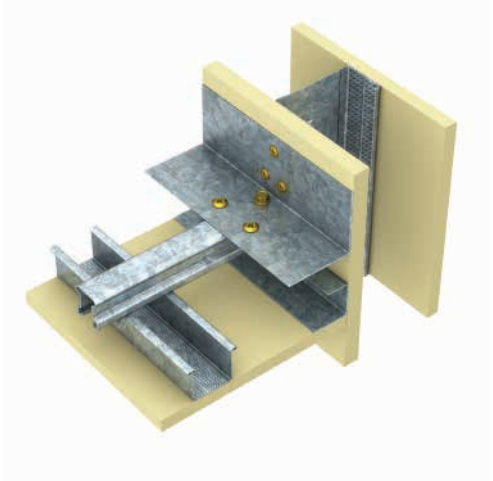

FIGURE B2.4.4(O): SQUARE SET FINISH

For the classic square set ceiling finish, the plasterboard should be terminated as close to the perimeter wall as possible, and the resulting joint set using either an internal corner bead or paper lined joint.

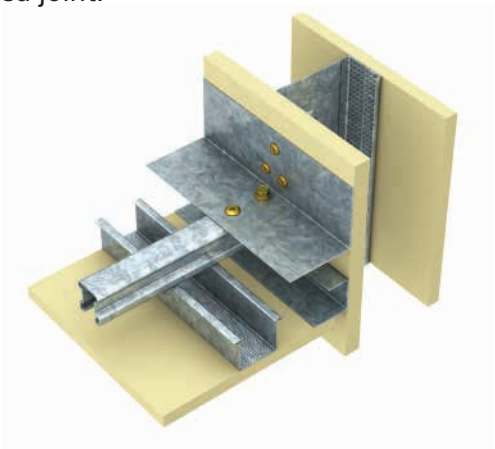

FIGURE B2.4.4(P): SHADOW LINE FINISH

For the shadow line ceiling finish, the plasterboard should be terminated approximately 10mm from the perimeter wall, and the resulting joint set a stopping angle appropriate for the board thickness.

This joint method is typically preferred as it allows for building movement without potentially cracking the joint.

The stopping angle is preferred as it allows the inter-storey drift to be accommodated without impacting the perimeter wall.

Step 16: Installing Downstruts

When the Rondo KEY-LOCK® Suspended Ceiling System is subjected to internal positive pressures greater than the weight of the ceiling grid and linings, the ceiling will experience uplift and in this instance downstruts need to be installed as follows:

When fixing to concrete:

a. Select the appropriate downstrut from Table B2.4.3(E) in accordance with the plenum depth and design.

b. Install the 249 brackets not more than 200mm from the suspension points.

c. Pre-cut the TCR or Stud section such that the gap either end does not exceed 3mm.

d. Secure the downstrut to the top bracket with 2/#8G SD screws.

e. Whilst supporting the downstrut, fix the 188 angle bracket to the TCR end using 2/#8G SD screws, ensuring the downstrut is plumb, vertical and the TCR is centreed.

f. Fix the 188 angle bracket to the head of the TCR using 2/#8G SD screws.

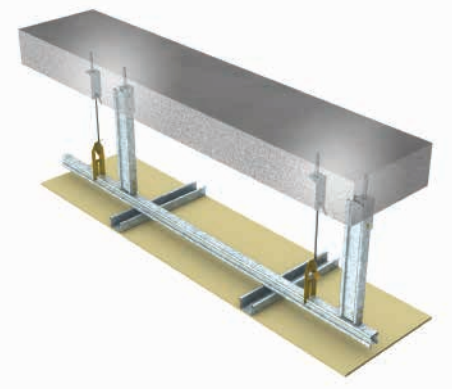

FIGURE B2.4.4(Q): DOWNSTRUT CONNECTION

When fixing to steelwork:

a. Ensure the plenum depth does not exceed 2000mm maximum.

b. Pre-cut the M535 top hat to the required length.

c. Fix the 188 angle bracket to one end of the top hat, in the centre, using 2/#8G SD screws.

d. Position the top hat over the suspension point as shown below and fix to the steelwork using 2/#12G HEX HD SD screws.

Where the standard downstrut details do not provide a suitable solution, refer to Rondo for an alternative solution.

Step 17: Installing Bracing

Where the design nominates bracing, it shall be installed in accordance with the design and the details herein.

Bracing can be either one way or two way depending on the project requirements.

The bracing shall be selected in accordance with Table B2.4.3 (I) and (J) in accordance with the design.

When fixing to concrete:

If you choose Gridlock bracing,

a. mark out the location of the Gridlock Furring Channel (GDLF) brackets using the bracing centres nominated by Rondo as per Table B2.4.2(D).

b. Place Gridlock (GDLF) onto the Furring Channel in the marked position and screw 2/#10G Hex HD SD screws through each side of the bracket into the Furring Channel.

c. Measure distance between bracket and slab above.

d. Cut stud to length 20mm shorter than the distance measured and attach the BC45 or BC90 to top of the studs.

e. Mark location of the fastener and drill hole in slab. Place the BC90 bracket and using Rondo CERT-R-FIX CH08(70mm) fasteners, fix through the bracket into the slab. f. Screw fix bottom of stud to the Gridlock (GDLF) using 4/#10G Hex HD SD screws.

If you choose to do site fabricated bracing,

a. Cut a small length of DHT (about 40mm long) which is used to cap the dropper stud.

b. Fix this to the top of the furring channel, next to a crossing TCR, using 1/#8G SD screw per side.

c. For plenum brace BR2 and BR3, fix Betagrip BG01 to DHT capping, using 2/#8G SD screw, Skip this step when using plenum brace BR1.

d. Measure and cut the first dropper stud to length, leaving not more than 5mm gap at the top of the stud. The second dropper stud is to be cut shorter (approx 25mm) than the first dropper stud to allow access for screw fixing.

e. Box the dropper studs, and screw fix the boxed studs together using 1/#12G SD screw per side top and bottom and thereafter at not more than 600mm centres. All the dropper stud should be flushed at the top and the same side of the TCR.

f. Fix the capping track from step (a) on to the bottom of the boxed dropper stud with 2/#12G on each side.

g. Align the dropper stud to the furring channel and TCR, ensuring the boxed stud is plumb in both directions. Transfer the set out to the slab soffit. Fix the dropper stud to TCR with 2/12G SD screws.

h. Install the 201 bracket using a HILTI HUS3 H8 x 65 ANCHOR screw anchor installed in the mounting hole to the same side as the dropper stud.

i. Fix the dropper stud to the 201 bracket using 3/#12G SD screws, making sure the stud is fitted to the same side of the bracket as the screw anchor, per Figure B2.4.4(R) below.

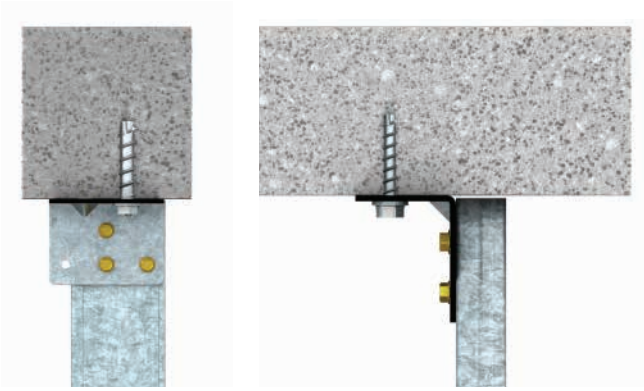

FIGURE B2.4.4(R): DROPPER STUD

For One-Way Bracing:

The diagonal brace member needs to be fitted to the correct side of the dropper stud, to ensure the bracing is consistent with the design.

Generally, the diagonal brace is required to be installed parallel to the room long sides, however this may not necessarily be the case in all situations and if in doubt check the design.

Diagonal brace should be installed at 45° (1H:1V) to the vertical, with a tolerance of about 5°.

Install the diagonal brace as follows:

a. For one way bracing, the diagonal brace can be installed to the left or the right, Figure B2.4.4(S) below shows bracing to the right. The brace direction can change throughout the ceiling area however, the direction of physical bracing needs to be maintained in accordance with the design.

b. Check the surrounding area of the brace location for services or the like and pick the side with the clearest access.

c. Measure and cut the diagonal brace to length such that it maintains an angle of 45° to the vertical. The soffit end of the brace should be cut flush with the soffit to facilitate the connection to the bracket. The opposing end of the brace can be square cut with the excess stud extending beyond the dropper stud.

d. Transfer the bracket set out to the slab soffit and install BC45 bracket if you choose Gridlock bracing otherwise the Rondo 201 bracket using HILTI HUS4 H8 x 65 anchor.

e. Fix the diagonal brace to the bracket using 4/#12G SD screws.

f. Fix the diagonal brace to the GDLF bracket at the furring channel location if you choose Gridlock bracing otherwise fix to the dropper stud using 4/#12G SD screws.

For Two-Way Bracing:

The diagonal brace member needs to be fitted to both sides of the dropper stud, at 90° to each other.

Diagonal brace should be installed at 45° (1H:1V) to the vertical, with a tolerance of about 5°.

The installation of two-way diagonal bracing follows the same methodology for one-way bracing, except the installation of the brace is repeated for the secondary direction.

Figure B2.4.4(T) below shows the bracing in one orientation. The brace direction can change throughout the ceiling area however, the direction of physical bracing needs to be maintained in accordance with the design.



FIGURE B2.4.4(S): ONE WAY BRACING (IMAGE DEPICTS GRIDLOK OPTION)



FIGURE B2.4.4(T): TWO-WAY BRACING (IMAGE DEPICTS GRIDLOK BRACING)

When fixing to steelwork:

Steps "a." to "e." follow the same as for concrete.

a. Align the dropper stud to the furring channel and TCR, ensuring the boxed stud is plumb in both directions. Transfer the set out to the steelwork above.

b. Install the 201 bracket to the web of purlins, or such that the fixings are in shear to other steelwork. Use 3/#12G SD screws to secure the bracket in place. Refer Figure B2.4.4(U) for details.



FIGURE B2.4.4 (U): FIXING TO PURLINS

When the dropper stud or bracing members do not align with the steelwork bridging should be installed to carry the bracing loads back to the structure.

The dropper stud can be suspended, similar to the dropper stud fixing, using a secondary steel stud per Figure B2.4.4(V) below:

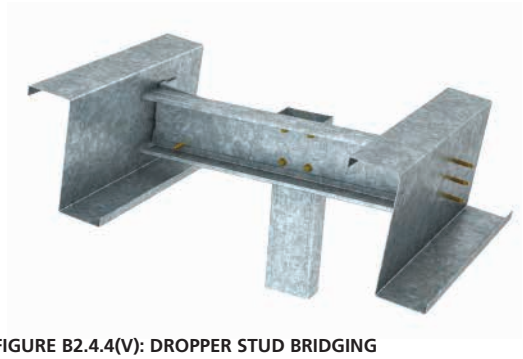

FIGURE B2.4.4(V): DROPPER STUD BRIDGING

Similarly, if you choose site fabricated bracing, the diagonal bracing studs can be suspended, using a secondary steel stud per Figure B2.4.4(X) below:

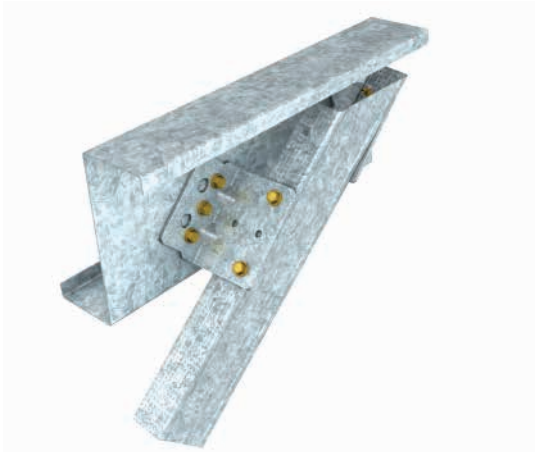

FIGURE B2.4.4(W): DIAGONAL BRACING STUD TO PURLIN

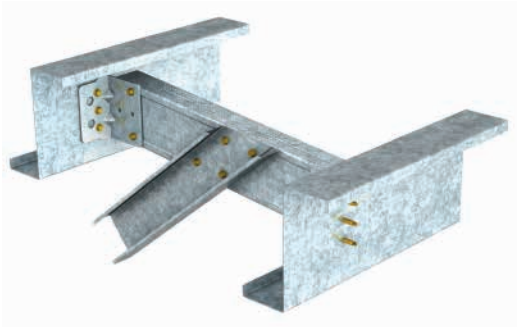

FIGURE B2.4.4(X): DIAGONAL BRACING STUD TO PURLIN BRIDGING

If you choose Gridlock bracing then use BC45 as shown below.

At **no time** should the bracing be installed directly to a purlin bottom flange, without the written approval from the design engineer or manufacturer. This can induce torsional loads into the roof purlins which they have not been designed to accommodate.

B2.4.5 ADDITIONAL DETAILS CONTROL JOINTS

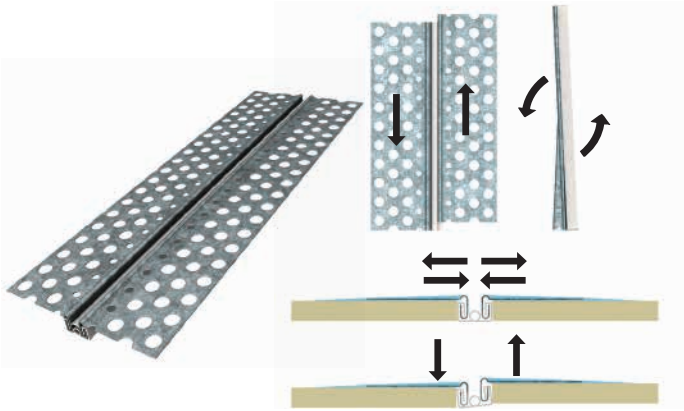

FIGURE B2.4.5(A): CONTROL JOINT

Refer Section A5.2.2 for general information regarding control joints.

Refer Section B1.2.2 for the control joint requirements relating to ceilings.

Install control joints as required, based on the project specific requirements.

The Rondo P35 control joint should not be used in applications where the expected movement at the joint exceeds ±3mm.

All framing members are to be suitably restrained and terminated at the control joint.

EXPRESS JOINTED CEILINGS

The Rondo 155 Furring Channel has a 48mm wide fixing face to facilitate the attachment of the ceiling linings with an expressed joint, or simply can be used with greater fixing edge distance.

The 155 Furring Channel can be fully integrated into the Rondo KEY-LOCK® Suspended Ceiling System in the exact same manner as the 129 Furring Channel, simply by swapping 139 Interchange clips with the 159 Interchange clip.

The wide fixing face allows for a 10mm expressed joint in conjunction with a 12mm edge distance to the ceiling lining fixings.

Figure B2.4.5(K) below shows a typical expressed joint detail within the ceiling linings.

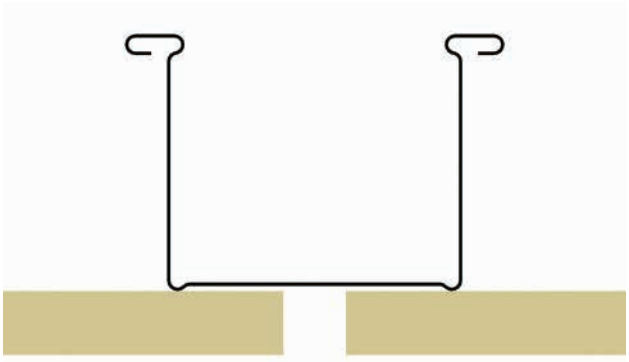

FIGURE B2.4.5(K): EXPRESS JOINTED LININGS

Whilst there are differences in the performance of the 129 and 155 furring channel, the 155 furring channel can be used in conjunction with the design Table B2.4.1(A), and subsequent design tables for both the vented and pressure sealed ceiling systems.

The 155 Furring Channel is a special made to order product, so check availability prior to ordering.

This product is only intended to be used internally.

SEISMIC JOINTS

Install seismic joints as required by the Design Engineer, or as shown on the Rondo design.

Refer standard details B2.4.3 for more detail.

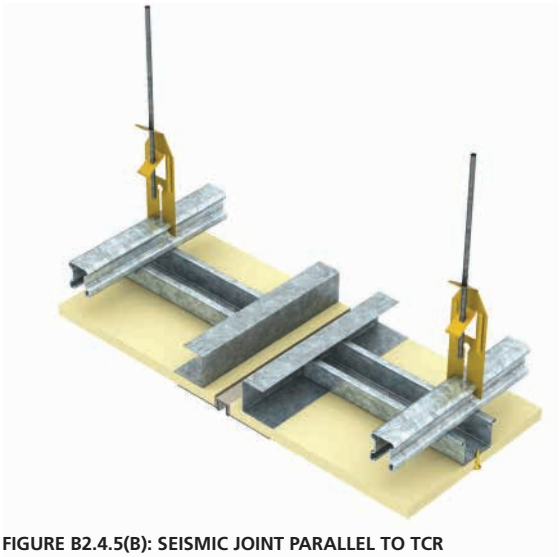

FIGURE B2.4.5(B): SEISMIC JOINT PARALLEL TO TCR

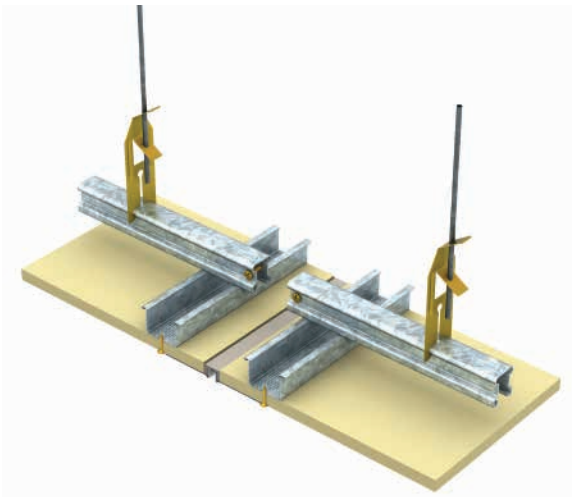

FIGURE B2.4.5(C): SEISMIC JOINT PARALLEL TO FC

Seismic joints may be required in one or two directions through the ceiling grid, depending on the design parameters.

If more than one seismic joint is specified in one direction of the ceiling, then the ceiling area between the seismcic joints should be braced.

MAINTAINING SEISMIC CONTINUITY

Refer to section B1.3.4.3 for general details relating to seismic irregularities.

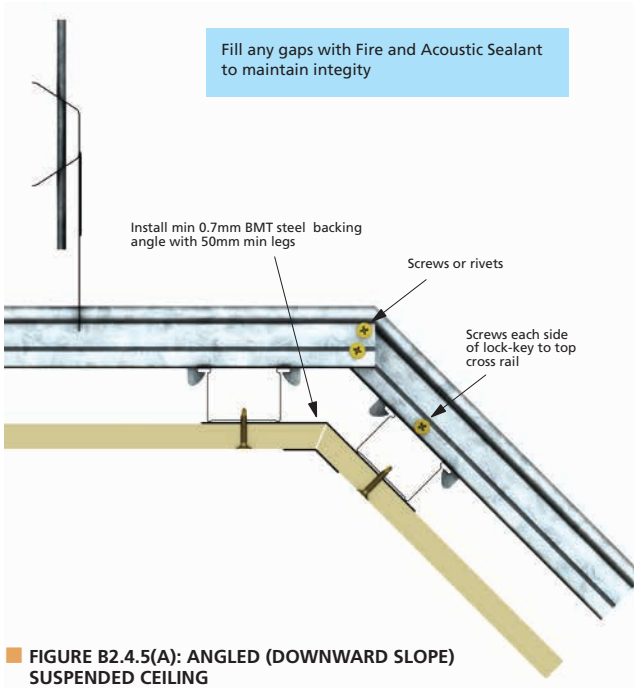

FIGURE B2.4.5(A): ANGLED (DOWNWARD SLOPE) SUSPENDED CEILING

Where the ceiling changes direction, the ceiling framing members should be mechanically fastened to each other and bracing should be provided in close proximity to the change in direction to carry the resulting seismic actions back to the structure.

CURVED CEILINGS

Curved or barrel-vaulted ceilings present a soft and luxurious image and can be readily assimilated within the Rondo KEY-LOCK® Ceiling Grid System.

Rondo can radius both the Top Cross Rail and furring channel sections to a concave or convex radius, depending on the desired finish.

Figure B2.4.5(F) provides details of the variables required to determine the ceiling radius, being:

C = distance across the radius (mm)

H = required height above the springing line the ceiling needs to achieve (mm)

In the figure below, the sections are depicted in a concave form.

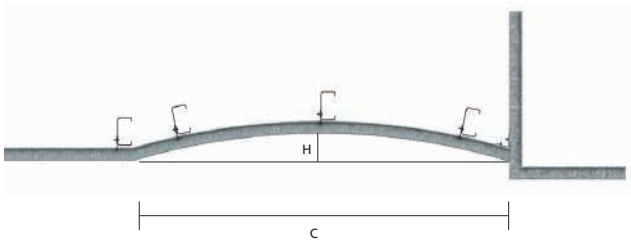

FIGURE B2.4.5(F): CURVED CEILING ALONG FC



FIGURE B2.4.5(G): CURVED CEILING ALONG TCR

PARTS No: 129R & 308R

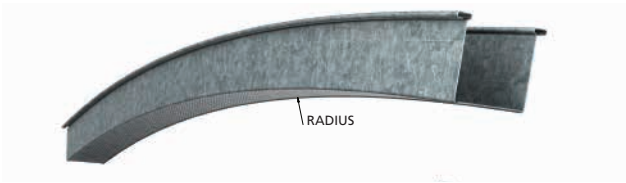

PARTS No: 127R & 128R

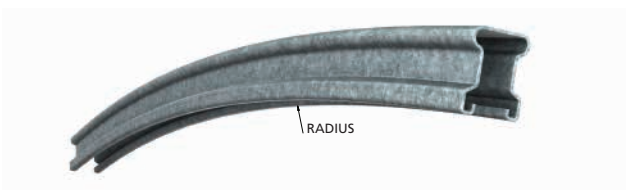

FIGURE B2.4.5(E): RADIUS DIMENSIONS

Using these two dimensions the curvature of the ceiling members can be determined. However, there are limitations as to how tight a radius can be formed, and for both the Rondo TCR and furring channels sections the minimum radius possible is 1200mm either concave or convex.

For curved ceilings, the lining materials typically require increased support to maintain their shape and form over the life of the ceiling.

Additionally, plasterboard has limits on the minimum radius they can achieve which varies according to the thickness of the board.

Table B2.4.5(A) below provides the guide to the minimum permissible radius for a given plasterboard thickness.

These limits should be checked with your lining board supplier as they can vary.

TABLE B2.4.5(A): MAXIMUM FURRING CHANNEL CENTRES FOR CURVED CEILINGS

Pasteboard Thickness (mm)	Ceiling Curve Radius (mm)						
	900-1000	1000-1500	1500-2000	2000-2500	2500-3000	3000-3500	4000+
	Maximum Furring Channel Centres (mm)						
6.5	150	200	250	300	350	450	550
10	150	200	250	300	350	400	500
13	-	150	200	250	300	400	500
16	-	-	-	-	-	250	350

CANTILEVERED CEILING ENDS

Cantilevered ceiling ends provide a stylish finish at ceiling ends and can be used to conceal lighting or services etc.

The construction of such cantilevers works with the back span of the ceiling members, as depicted in Figure B2.4.5(H) below.

FIGURE B2.4.5(H): CANTILEVER FURRING CHANNEL

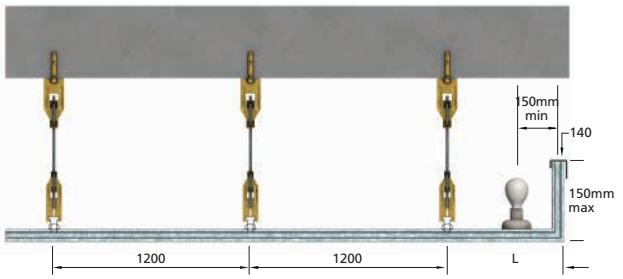

TABLE B2.4.5(B): MAXIMUM CANTILEVER

Member	Centres (mm)	Cantilever L (mm)
129 Furring Channel	600	350
	450	380
308 Furring Channel	600	250
	450	270
127 Top Cross Rail	1200	260
	900	280
128 Top Cross Rail	1200	370
	900	420

The maximum cantilever nominated in Table B2.4.5(B) above can be achieved within the following limitations:

- Maximum upstand to cantilever 150mm
- Maximum weight of services within cantilever section not to exceed 5kg/m
- Deflection limited to L/300 for visible line of sight
- Splicing of the cantilever section is not permitted within the two adjacent back span sections as shown in Figure B2.4.5(H)
- Maximum weight of ceiling not to exceed 10kg/m^2, including the ceiling grid weight

In the cantilever ceiling detail, bracing of the ceiling has not been shown for clarity and is to be installed in accordance with the ceiling design.

Where the back span cannot achieve 1200mm, as detailed, contact Rondo for a specific solution.

BULKHEADS

Bulkheads typically occur at changes in ceiling levels, are used to conceal services or the like or even as an architectural feature.

It is important that bulkheads are suitably designed as quite often they have additional loads attached to them due to signage or features, that need to be accommodated.

The bulkhead details herein have been designed using the following minimum requirements:

Lateral live action (Q): 0.25kPa (25kg/m^2)
Vertical live action (Q): 0.15kPa (15kg/m^2)
Self-weight (G): 13kg/m^2

- Maximum ceiling weight 12kg/m^2
- Maximum length of ceiling retrained by the bulkhead ≤ 8.0m (to match table 2.4.1B 2nd column, 2nd row max ceiling run length)
- Maximum seismic action for the component not to exceed 1.0W_p

Should your project require higher design actions than the above contact your local Rondo representative to discuss.

The design tables provide solutions with seismic restraint of the ceiling considered, based on the bulkhead configuration shown in Figure B2.4.5(I) below.

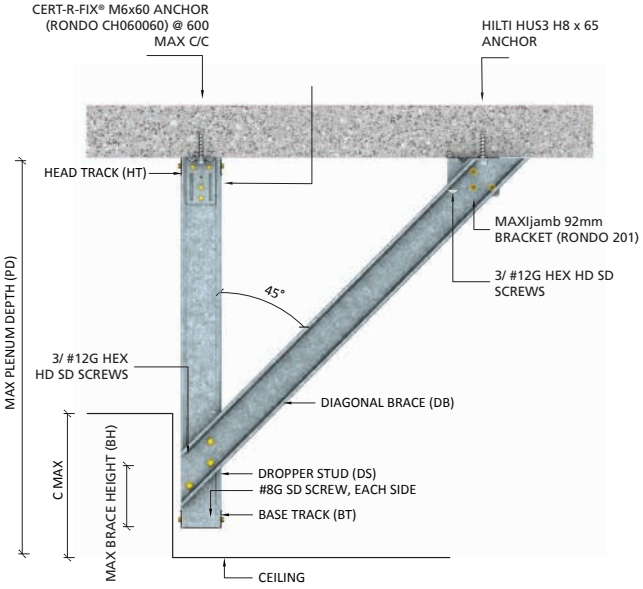

FIGURE B2.4.5(I): TYPICAL BULKHEAD DETAIL

DROPPER STUDS (DS)

The dropper stud has been designed for actions specified above, and is to clear span between the head track (HT) and base track (BT), similar to a wall scenario, except the base track is suspended.

Note; where the bulkhead is to be installed within a pressure sealed ceiling the bulkhead will also need to be designed for the resulting internal pressure applied over the lined portion of the fascia.

The dropper studs are not permitted to be spliced within their span, unless specifically designed otherwise.

Table B2.4.5(C) below provides the maximum drop height (D) permissible for the nominated stud section (DS).

TABLE B2.4.5(C): DROPPER STUDS

Dropper Stud (DS)	Centres (mm)	Max Drop D (mm)
64 x 0.50bmt	600	700
	400	1400
64 x 0.75bmt	600	1400
	400	1600
64 x 1.15bmt	600	2000
	400	2000

HEAD TRACK CONNECTION

The head track (HT) shall be the same size and gauge as the dropper stud.

Cutting, notching or the like is not permitted anywhere along the head track unless specifically designed otherwise.

The dropper studs are required to be securely fixed inside the head track, using 1/#8G SD screw per side per stud.

Additionally, the track fixing to the structure shall be located within 50mm of the dropper stud location in order to minimise the secondary bending effects in the track.

BASE TRACK (BT)

The base track has been designed for actions specified above, and is required to span between the bracing centres along the bulkhead.

Note; where the bulkhead is to be installed within a pressure sealed ceiling the bulkhead will also need to be designed for the resulting internal pressure applied over the lined portion of the fascia.

Table B2.4.5(D) below provides the maximum span (L) for the nominated base track (BT).

TABLE B2.4.5(D): BASE TRACKS (BT)

Base Track (BT)	Stud Centres (mm)	Max Ceiling Load (kN/m)	Max Span L (mm)
64 x 32 x 0.70bmt	600	0.824	1200
	600	1.650	600
	400	2.472	400

Notes:
1. Lined portion of bulkhead not to exceed ½ the drop height.
2. Maximum internal pressure 0.375kPa.
3. Maximum span is the distance between bracing members.
4. Bracing member to be same size and gauge as dropper studs.

BASE CONNECTION

The base track (BT) shall be as nominated in Table B2.4.5(D).

Cutting, notching or the like is not permitted anywhere along the base track unless specifically designed otherwise.

The dropper studs bottom in the base track and are to be screw fixed either side using 1/#8G SD screw per stud.

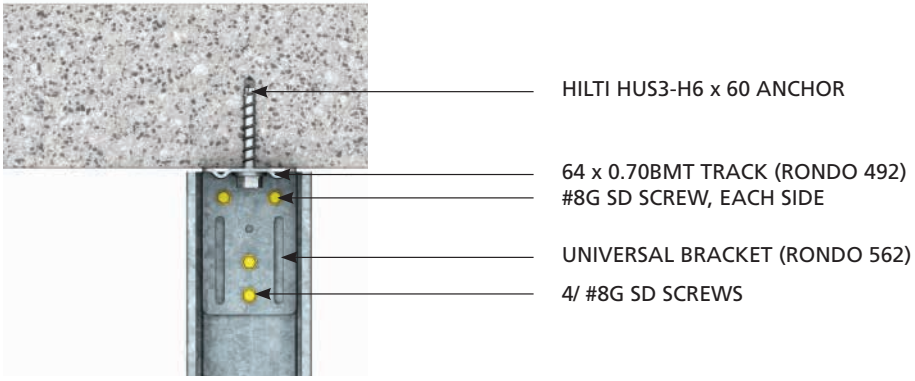

FIGURE B2.4.5(J): HEAD TRACK CONNECTION

DIAGONAL BRACE (DB)

The diagonal brace stud has been designed for actions specified above, and is to clear span between the dropper stud (DS) and the structural soffit.

Note; where the bulkhead is to be installed within a pressure sealed ceiling the bulkhead will also need to be designed for the resulting internal pressure applied over the lined portion of the fascia.

The diagonal braces are not permitted to be spliced within their span, unless specifically designed otherwise.

TABLE B2.4.5(E): DIAGONAL BRACE MEMBERS

Dropper Stud (DB)	Centres (mm)	Max Drop PD (mm)
64 x 0.50bmt	600	700
	400	1400
64 x 0.75bmt	600	1400
	400	1600
64 x 1.15bmt	600	2000
	400	2000

Diagonal brace should be installed at 45° (1H:1V) to the vertical, with a tolerance of about ±5°. Significantly changing the angle of the braces can reduce the brace capacity.

TABLE B2.4.5(F): ATTACHMENT OF CEILINGS TO BULKHEADS

Diagonal Brace(DB)	Centres (mm)	Max Drop PD (mm)	Diagonal Brace Height BH (mm)	Max Seismic Ceiling Load (kN/m)
64 x 0.50bmt	1200	700	100	0.453
	600	700	100	0.920
	400	1400	200	1.359
64 x 0.75bmt	1200	1400	200	0.824
	600	1400	200	1.648
	400	1600	200	2.472
64 x 1.15bmt	1200	2000	300	0.782
	600	2000	300	1.648
	400	2000	300	2.472

The maximum seismic horizontal load from ceiling fixed to bulkhead shall not exceed the following limits:Where the ceiling is fixed to both sides of the bulkhead, the actual seismic horizontal load is the sum of the seismic horizontal load on either side of the bulkhead and shall not exceeds the above limits.

DIAGONAL BRACE CONNECTION

The diagonal brace (DB) shall be as nominated in Table B2.4.5(E).

Cutting, notching or the like is not permitted anywhere along the diagonal brace unless specifically designed otherwise.

The end of the diagonal brace, at the soffit, should be cut parallel to the structure to facilitate the proper connection.

Align the diagonal brace to the side of the dropper stud and transfer the set out to the slab soffit.

Install the 201-bracket using a HILTI HUS3 H8 x 65 screw anchor installed in the mounting hole.

Fix the diagonal brace to the 201-bracket using 3/#12G SD screws, making sure the stud is fitted to the same side of screw anchor.



B2.5

KEY-LOCK© DIRECT FIXED CEILING SYSTEMS

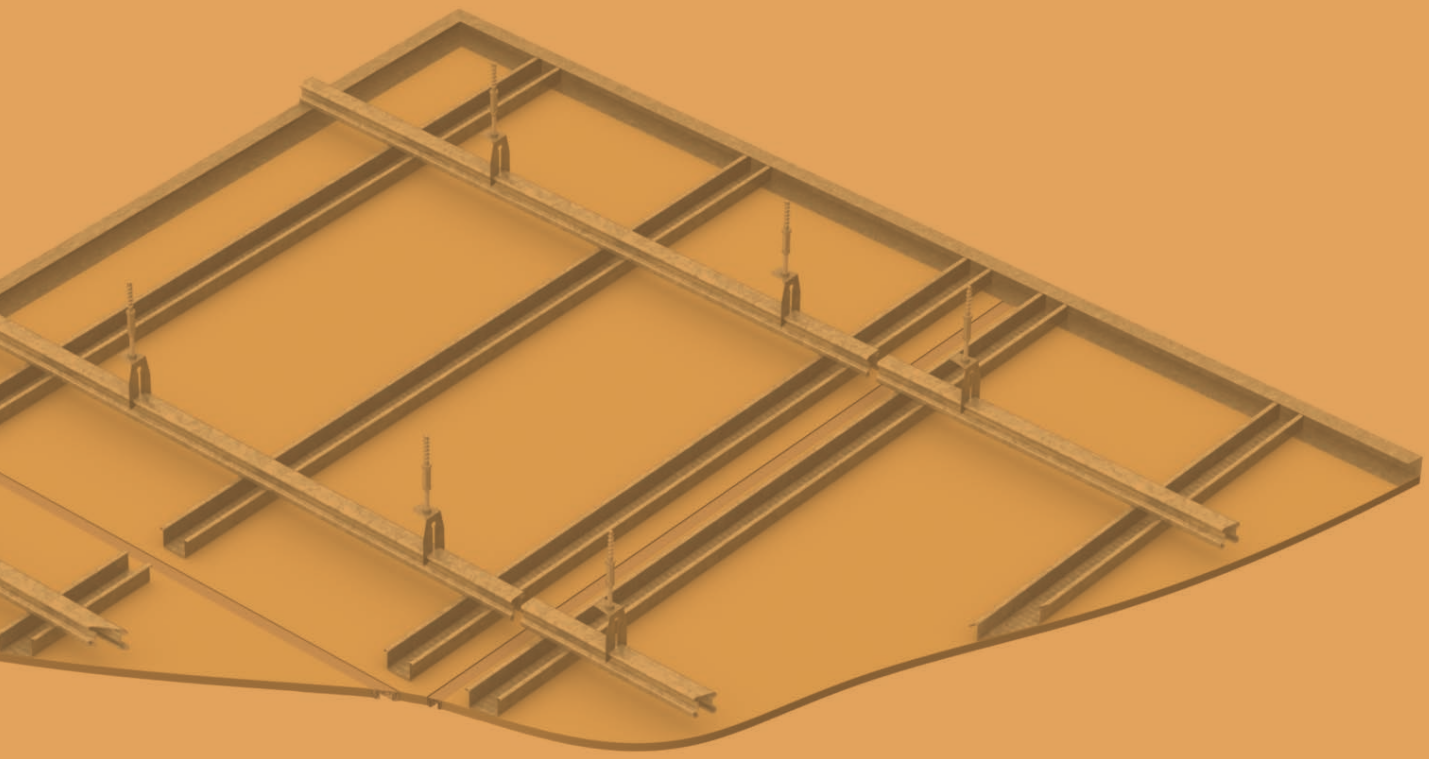

OTHER KEY-LOCK© SYSTEMS IN THIS SERIES:

B2.4 KEY-LOCK© SUSPENDED CEILING SYSTEMS
B2.6 KEY-LOCK© RESIDENTIAL CEILING SYSTEMS

B2.5 KEY-LOCK® DIRECT FIX CEILING SYSTEMS

In addition to fully suspended ceilings, the Rondo KEY-LOCK® Concealed Ceiling System can also be used for direct fix applications. The system has a wide range of direct fix clips that allows to direct fix the Top Cross Rails, Furring Channels or Ceiling Battens to either concrete, steel or timber structures.

These systems are suitable for internal use including those located in cyclonic and high wind regions.

The direct fix ceiling systems require a minimum plenum depth, which can be as small as 22mm. However, Rondo recommends the maximum drop for a direct-fix ceiling system should be limited to 230mm. Where the ceiling drops exceeds 230mm the KEY-LOCK® Suspended Celling Systems can be utilised as detailed in Section B2.4. Please note Rondo has acoustic mounted options available for KEY-LOCK® Direct Fixed Ceiling Systems. Please refer to Rondo for further information.

B2.5.1 FURRING CHANNEL DIRECT FIXED CEILINGS

Rondo furring channel direct fix ceiling system is the most popular system for smaller plenum depths, particularly in high rise residential applications.

B2.5.1.1 DIRECT FIX BRACKET/CLIP SELECTION

FIXING TO CONCRETE:

Table B2.5.1.1(A) and (B) provides an overview of the various FC direct fix clips that are available, including the minimum and maximum plenum depth achievable for each configuration. The plenum depth is based on the Rondo sections nominated and should be adjusted accordingly to the actual if different.

Refer to Section A5.1.1 for assumptions relating to the concrete substructure, to ensure compatibility. Where the design assumptions are not compatible refer to Rondo for a specific solution.

Rondo recommends all fasteners into concrete to comply with the requirements of NZS 3101.

TABLE B2.5.1.1(A): DIRECT FIX FURRING CHANNEL TO CONCRETE

Substrate	Assembly	Direct Fix Clip (Part No)	Furring Channel (Part No)	Suitable Plenum Depth (mm)		Adjustment (mm)
				Minimum	Maximum	
Concrete	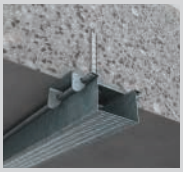	237	129	33	33	0
			308	22	22	0
				28	28	0
Concrete		157	155	33	33	0
Concrete		239	129	36	38	2
			308	25	27	2
				31	33	2
Concrete		BG01	129	30	48	18
			308	31	37	6
				31	43	12
Concrete		BG02	129	50	68	18
			308	51	57	6
				52	64	12
Concrete		BG05	129	64	82	18
			308	65	71	6
				66	78	12
Concrete		FCINFIN030	129	35	49	14
			308	32	37	5
				32	44	12
Concrete	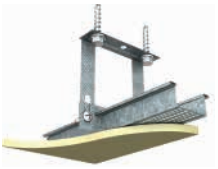	FCINFIN080	129	80	97	17
			308	80	85	5
				80	92	12

FIXING TO PURLINS:

Table B2.5.1.1(B) can be used to select an appropriate fixing method for a steel structure. Refer to Section A5.1.2 for assumptions relating to the steel substructure, to ensure compatibility.

Rondo recommends all fasteners into steel to comply with the requirements of AS3566.1.

TABLE B2.5.1.1(B): DIRECT FIX FURRING CHANNEL TO STEEL/TIMBER

Substrate	Assembly	Direct Fix Clip (Part No)	Furring Channel (Part No)	Suitable Plenum Depth (mm)		Adjustment (mm)
				Minimum	Maximum	
Steel/Timber	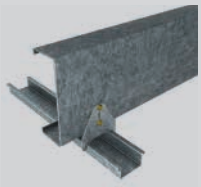	226	129	35	57	22
			308	24	45	21
				30	51	21
Steel/Timber		156	155	35	57	22
Steel/Timber		394	129	35	156	121
			308	24	145	121
				30	151	121

Notes:
1. *Minimum and maximum plenum depth are based on 129FC. If you are using any other parts add or subtract based on the height listed in Table B2.2(A).*

Direct fix ceiling battens are only recommended for residential application as detailed in Section B2.6.

B2.5.1.2 DESIGN DATA

Tables B2.5.1.2(A) and (B) below shall be used to determine the maximum span and spacing for the 129 and 308 furring channels respectively.

TABLE B2.5.1.2(A): 129 FURRING CHANNEL DIRECT FIX SPAN TABLE (BS MAX.)

Ultimate Wind Pressure (kPa)	Lining		Grid Size - Bracket Spacing (mm) (FS)							
	Description	Weight (kg/m²)	A237 DIRECT FIX CLIP				226/394 DIRECT FIX CLIP			
			Single Span		Continuous Span		Single Span		Continuous Span	
			450	600	450	600	450	600	450	600
0.00	1/10mm or 1/13mm Standard Plasterboard	9	1840	1670	2270	2060	1840	1670	2270	2060
	1/13mm Plasterboad (Other)	11.5	1710	1555	2115	1920	1710	1555	2115	1920
	Unknown Lining 1	13	1650	1500	2040	1855	1650	1500	2040	1855
	Unknown Lining 2	16	1550	1405	1915	1740	1550	1405	1915	1740
0.25	1/10mm or 1/13mm Standard Plasterboard	9	1580	1430	1950	1770	1580	1430	1950	1770
	1/13mm Plasterboad (Other)	11.5	1520	1380	1880	1710	1520	1380	1880	1710
	Unknown Lining 1	13	1515	1375	1875	1705	1515	1375	1875	1705
	Unknown Lining 2	16	1470	1340	1820	1655	1470	1340	1820	1655
0.50	1/10mm or 1/13mm Standard Plasterboard	9	1330	1210	1640	1490	1330	1210	1640	1330*
	1/13mm Plasterboad (Other)	11.5	1310	1190	1610	1470	1310	1190	1610	1270*
	Unknown Lining 1	13	1300	1185	1610	1455	1300	1185	1610	1245*
	Unknown Lining 2	16	1280	1165	1585	1440	1280	1165	1575*	1180*
0.75	1/10mm or 1/13mm Standard Plasterboard	9	1170	1060	1400	1250	1200	1090	1270*	950*
	1/13mm Plasterboad (Other)	11.5	1180	1070	1450	1250	1180	1070	1230*	920*
	Unknown Lining 1	13	1175	1070	1455	1245	1175	1070	1210*	905*
	Unknown Lining 2	16	1160	1055	1410	1220	1160	1055	1165*	870*
1.00	1/10mm or 1/13mm Standard Plasterboard	9	1135	1035	1340	1155	1135	1035	990*	740*
	1/13mm Plasterboad (Other)	11.5	1090	990	1280	1100	1090	990	960*	720*
	Unknown Lining 1	13	1085	985	1275	1100	1085	985	950*	710*
	Unknown Lining 2	16	1075	975	1255	1085	1075	975	920*	690*

TABLE B2.5.1.2(B): 308 FURRING CHANNEL DIRECT FIX SPAN TABLE (BS MAX.)

Ultimate Wind Pressure (kPa)	Lining		Grid Size - Bracket Spacing (mm) (FS)							
	Description	Weight (kg/m²)	A239-C DIRECT FIX CLIP				226/394 DIRECT FIX CLIP			
			Single Span		Continuous Span		Single Span		Continuous Span	
			450	600	450	600	450	600	450	600
0.00	1/10mm or 1/13mm Standard Plasterboard	9	1200	1090	1485	1350	1200	1090	1485	1350
	1/13mm Plasterboad (Other)	11.5	1120	1015	1385	1255	1120	1015	1385	1255
	Unknown Lining 1	13	1080	980	1330	1215	1080	980	1330	1215
	Unknown Lining 2	16	1010	920	1250	1135	1010	920	1250	1135
0.25	1/10mm or 1/13mm Standard Plasterboard	9	1035	940	1280	1165	1035	940	1280	1165
	1/13mm Plasterboad (Other)	11.5	1010	915	1245	1135	1010	915	1245	1135
	Unknown Lining 1	13	985	895	1220	1105	985	895	1220	1105
	Unknown Lining 2	16	955	870	1185	1075	955	870	1185	1075
0.50	1/10mm or 1/13mm Standard Plasterboard	9	875	795	1090	985	875	795	1090	985
	1/13mm Plasterboad (Other)	11.5	860	780	1065	970	860	780	1065	970
	Unknown Lining 1	13	855	775	1055	960	855	775	1055	960
	Unknown Lining 2	16	835	760	1035	940	835	760	1035	940
0.75	1/10mm or 1/13mm Standard Plasterboard	9	785	710	970	860	785	710	970	860
	1/13mm Plasterboad (Other)	11.5	775	705	960	850	775	705	960	850
	Unknown Lining 1	13	775	700	955	870	775	700	955	870
	Unknown Lining 2	16	760	690	945	855	760	690	945	855
1.00	1/10mm or 1/13mm Standard Plasterboard	9	720	655	875	760	720	655	875	760
	1/13mm Plasterboad (Other)	11.5	715	650	865	750	715	650	865	750
	Unknown Lining 1	13	710	645	860	745	710	645	860	710*
	Unknown Lining 2	16	705	640	845	735	705	640	845	690*

Notes:

1. *The tables above are only valid if you are using 141/559 wall tracks to provide perimeter restraint to the ceiling in the direction of the furring channels. Contact Rondo technical services for alternative solutions if the installation is to be otherwise installed.*
2. *Contact Technical Services for alternative lining configurations outside of the above options.*
3. *The maximum spacing of the furring channels does not consider the capacity of the plasterboard. Accordingly, the maximum furring channel spacing should be checked with the board manufacturer and the lesser spacing adopted.*
4. *Rondo recommends a maximum 450mm spacing of furring channels for 10mm board unless the manufacturer confirms otherwise.*
5. *Serviceability limit state deflection is limited to the following.*
   a. L / 200 for Gmax + Wser,dn and 0.9Gmin+Wser,up
   b. L / 360 for Gmax
6. *Connection to the primary structure has been checked in accordance with Section A5.1. Where the actual site conditions are not in accordance with the limitations provided contact Rondo for an alternative solution.*
7. *The span shall be measured between fixing clips, and the spacing shall be centre to centre of the furring channels.*
8. *Unknown lining refers to the case where the ceiling linings are neither 10mm or 13mm plasterboard as nominated. However, it is assumed the ceiling linings are panelised materials similar to plasterboard such as MDF, plywood or even sheet metal. The above tables are not compatible with discrete lining materials such as baffles, timber battens, strip systems or the like where the materials can move independent of each other and do not form a membrane as such to even distribute the design actions throughout the ceiling grid.*
9. *Table considers grid weight and an additional 1kg/m2 insulation weight as dead loads in addition to the lining weight specified.*
10. ** has been shown next to the span when bracket capacity limits the maximum span.*

Figure B2.5.1.3(A) and (B) provides an overview of design options available when considering seismic compliance.

The furring channel design is primarily controlled by gravity or combined gravity and wind actions, and Table B2.5.1.2(C) or (D) below provides the maximum ceiling length that can be achieved, when installing the furring channels as perimeter fixed (option 1) using the ceiling weights, and subsequent furring channel configuration, determined from either Table B2.5.1.2(A) or (B) above.

In addition to determining the maximum ceiling length for perimeter fixed ceilings, Table B2.5.1.2(C) or (D) can also be used to assess the maximum ceiling length for seismic jointed ceilings. These are explained further below.

TABLE B2.5.1.2(C): MAXIMUM FURRING CHANNEL LENGTH FOR PERIMETER FIXING - LOW STRENGTH

Lining		Maximum Ceiling Grid Length (LF1 in figure B2.5.1.2(C) (m) - 141 as Perimeter Track at Fixed Side					
Description	Weight (kg/m²)	0.8g	1.0g	1.3g	1.6g	2.0g	3.6g
1/10mm or 1/13 Standard Plaster board	9.0	8.6	6.9	5.3	4.3	3.4	-
1/13mm Plaster board (Other)	11.5	6.9	5.5	4.2	3.4	2.7	-
Unknown Lining 1	13	6.2	4.9	3.8	3.1	-	-
Unknown Lining 2	16	5.1	4.1	3.1	2.5	-	-

TABLE B2.5.1.2(D): MAXIMUM FURRING CHANNEL LENGTH FOR PERIMETER FIXING - HIGH STRENGTH

Lining		Maximum Ceiling Grid Length (LF1 in figure B2.5.1.2(D) (m) - 559 Angle as Perimeter Track at Fixed Side					
Description	Weight (kg/m²)	0.8g	1.0g	1.3g	1.6g	2.0g	3.6g
1/10mm or 1/13 Standard Plaster board	9.0	12.0	12.0	12.0	10.0	8.0	5.0
1/13mm Plaster board (Other)	11.5	12.0	12.0	9.9	8.1	6.5	4.0
Unknown Lining 1	13	12.0	11.6	8.9	7.2	5.8	-
Unknown Lining 2	16	12.0	9.6	7.4	6.0	4.8	-

Notes:

1. The above maximum furring channel length has been checked for the 141 wall track or 559 wall angle connected to the supporting structure as per Table B2.4.3(A) Wall track fixing details WTa, WTb, WTc and WTd as applicable.

2.The fixed and free ends of the furring channel shall be as per Table B2.5.1.4(C) or (D) based on square set or shadow line finish, as applicable.

3. Where the details above do not provide a solution contact Rondo for a specific design.

4. Control joints, seismic separation joints or any other discontinuity in the ceiling grid is not permitted within the ceiling length nominated.

5. The earthquake actions provided to the table as a function of gravity are representative of the actions applicable to part design ie. adopting a ductility factor μp of 1.0. Earthquake actions appropriate to connection design have been used where required in the analysis.

B2.5.1.3(A) FC DIRECT FIX PERIMETER FIXED CEILING

This option is typically suitable for small rooms with bounding walls or bulkheads on all four sides, at least one of which must be capable of restraining the ceiling. Furring channel and direct-fix clip connection types are shown in Table B2.5.1.4(B). When seismic direction is perpendicular to grid, direct-fix ceiling clip connection have the capacity of transferring seismic action back to main structure for all grid size and bracket spacing provided in table B2.5.1.2(A) or (B). Hence allows a maximum ceiling length of 12m across the grid. The maximum room size along the grid is generally limited to the capacity of the perimeter connection to transfer the seismic action to the perimeter walls. As the design requires the ceiling grid members and linings to pass the seismic actions to the perimeter walls, it is important that the ceiling grid is not disrupted by control joints or other discontinuities likely to adversely affect the continuity of the ceiling grid.

Maximum room size will be reduced with increasing ceiling weight and seismic action. Refer table B2.5.1.2(A) or B2.5.1.2(B) for framing member selection and table B2.5.1.2(C) or (D) to determine maximum room size.

If the room size is larger than the maximum ceiling grid length specified in Table B2.5.1.2(C) then refer to Section B2.5.1.3(B)

SYSTEM LAYOUT

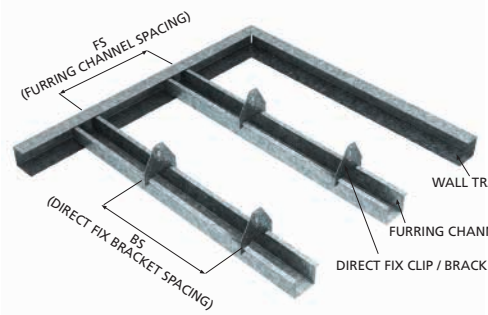

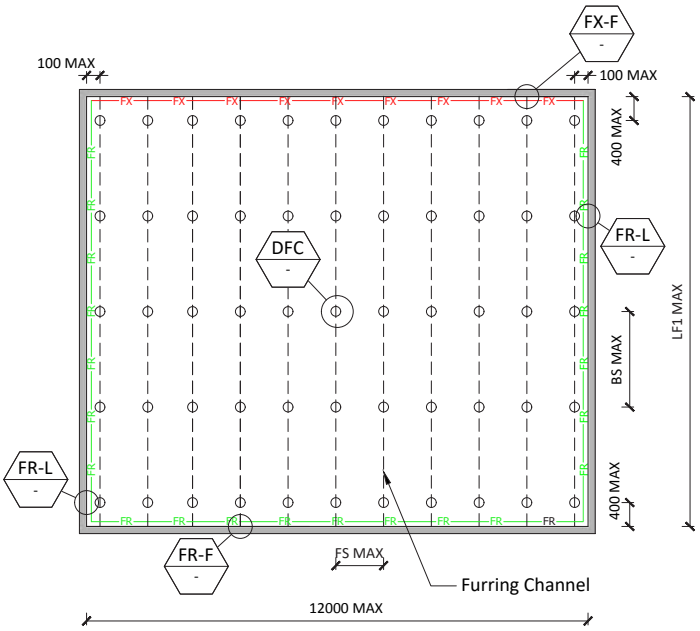

FIGURE B2.5.1.3(A): FC DIRECT FIX PERIMETER FIXED CEILING

Notes:
1. Refer to B2.3.1.4(C) or (D) for FX-F, FX-L, FR-F & FR-L.
2. Refer to Table B2.5.1.4(B) for DFC details.

TABLE B2.5.1.3(A): FC DIRECT FIX PERIMETER FIXED CEILING COMPONENTS

ITEM	DESCRIPTION		RONDO PARTS OPTIONS*
1	Wall Track, Angle		140, 141, 552, 559
2	Furring Channel		129, 155, 308, 308R
3	FC Direct Fix Bracket	Concrete Substrate	Table B2.5.1.1(A)
		Steel/Timber Substrate	156,226,394
4	Lining		-

Notes:
1. Refer to Table B2.2 for more detail description of different part numbers.

SYSTEM SELECTION

For perimeter fixed ceilings, the assessment of the ceiling grid is as follows:

a. Determine the plenum depth required and the supporting structure constuction (i.e. purlin or concrete slab).

b. Refer to Table B2.5.1.1(A) or (B) and select an appropriate clip/bracket.

c. Refer to Table B2.5.1.2(A) OR (B) and check the appropriate section of the table matching to the design internal pressure previously determined. Scroll across the table to determine the ceiling grid components, the member spans and spacings and the subsequent clip/bracket set out.

d. Check the maximum length of the ceiling grid does not exceed the limits specified in Table B2.5.1.2(C).

e. Check the perimeter walls or bulkheads can restrain the ceiling grid.

The design Tables B2.5.1.2(A) and (B) have been prepared based on typical installation details. Accordingly, the ceiling grid is to be installed in accordance with the limitations provided in the Tables.

DESIGN EXAMPLE

Internal Direct Fixed ceiling design is required for a 20m high apartment building located in New Plymouth. The ceiling is acting as a return air plenum and is fully vented to the room. The subject ceiling is located 18m above the ground floor and lined with 1 layer of 13mm plasterboard. Ceiling plenum depth is 75mm and it is attached to a slab above. Site sub-soil class for earthquake action is C. Importance level of the building has been stated as IL2 in the structural notes.

Step 1:

Determine the building parameters for wind and seismic events.

Importance Level	- 2	
Region	- NZ1	(Refer to Figure A3.4.2.1(A))
Terrain Category	- 3	(Refer to Figure A3.4.2.1(B))
Building Height	- 20m	
Site sub-soil class	- C	

Step 2:

Determine whether you can use this series or need specific design.

By using Figure B1.1.1(B) this series can be used for the preliminary design.

Step 3:

Select direct fix clip.

From Table B2.5.1.1(A), for plenum depth 75mm BG05 shall be used.

Step 4:

Determine internal pressure coefficients.

Refer figure B1.3.3(E)

$C_{p,i\ net}$ = 0 therefore vented ceiling design table can be used

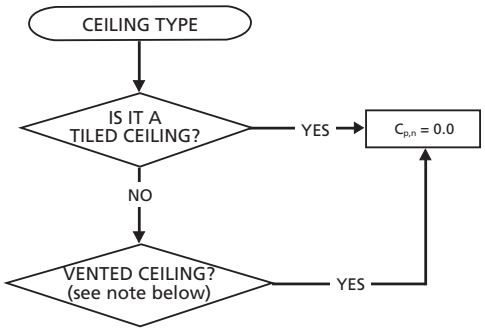

Step 5:

Determine ceiling framing configuration.

By using Table B2.5.1.2(A), for 1 layer of 13mm standard plasterboard, 0.0 kPa ceiling pressure and BG05 the 129 furring channel can continuous span 2060mm if it is spaced at 600mm centres.

Step 7:

Determine Seismic action.

Following parameters are given in the above example.

- Location - New Plymouth
- Site sub-soil class - C
- Importance level - 2

From table A3.5.2(B) from Design Data - Series A, hazard design factor(Z) for Manukau City will be 0.18.

By referring Figure A3.5.2(C) for IL2, Z=0.18 and site sub soil classification C, F_{ph}/W_p will be 1.43g.

Step 8:

Determine maximum room size.

By using table B2.5.1.2(C) for 1 layer of 13mm plasterboard and F_p/W_p = 1.43g, maximum ceiling grid length will be interpolated between 1.3g and 1.6g. Maximum ceiling grid length is 11.1m.

If the room size along FC direction is greater than 11.1m, then go to section B2.5.1.3(B) for seismic jointed ceiling.

Step 9:

Design summary

FC Direct Fix Bracket	- Rondo #BG05 at 2050mm max centres
Furring channel	- Rondo #129 FC at 600mm max centres
Maximum Room Size	- 12.0m Perpendicular to FC x 11.1m Parallel to FC

Step 10:

Detail drawings.

See section B2.5.1.4

Step 11:

Installation procedure.

See section B2.5.1.5

B2.5.1.3(B) FC DIRECT FIX SEISMIC JOINTED CEILING

This option is an extension of the perimeter fixed ceiling option covered under B2.5.1.3(A), except the maximum ceiling area can potentially be doubled by introduction of a seismic joint through the middle of the ceiling in both directions.

This is suitable when you have larger rooms, however, still requires the ceiling to be enclosed by walls or bulkheads on all four sides **all of which** must be capable of restraining the ceiling grid. The maximum ceiling area will be reduced with increasing ceiling weight and seismic action.

Refer table B2.5.1.2(A) or (B) for framing member selection and the maximum ceiling grid length can be determined from Table B2.5.1.2(C) or (D). The maximum room size can be double the ceiling grid length provided the distance from any wall to the seismic joint does not exceed the maximum furring channel length given in Table B2.5.1.2(C) or (D) and the ceiling construction details are consistent with the assumptions used in Table B2.5.1.2(A) or (B) as applicable.

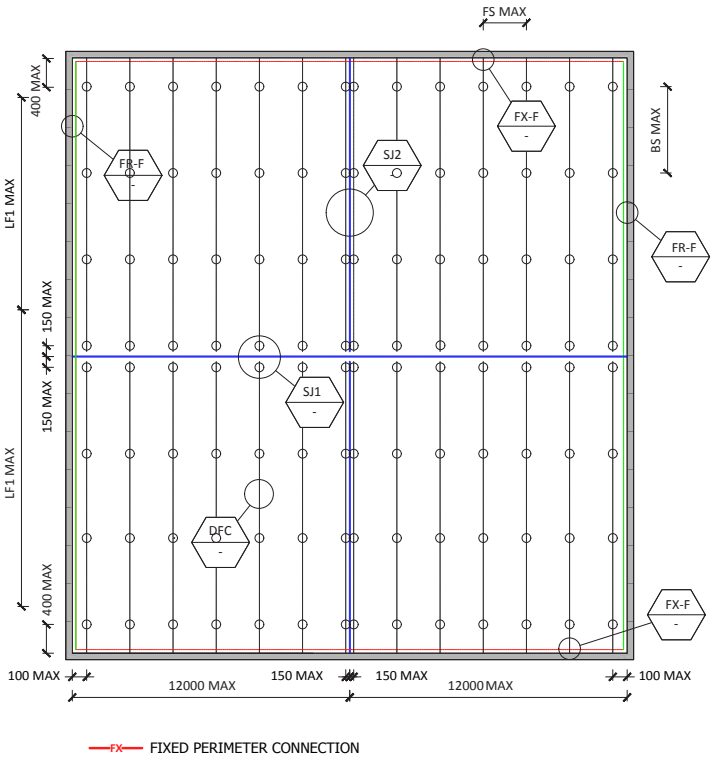

FIGURE B2.5.1.3(B): FC DIRECT FIX PERIMETER FIXED SEISMIC JOINTED CEILING

1. Refer to Table B2.5.1.4(C) for FX-F, FX-L and B2.5.1.4(E) for SJ1,SJ2.
2. Refer to Table B2.5.1.4(A) for DFC

SYSTEM LAYOUT

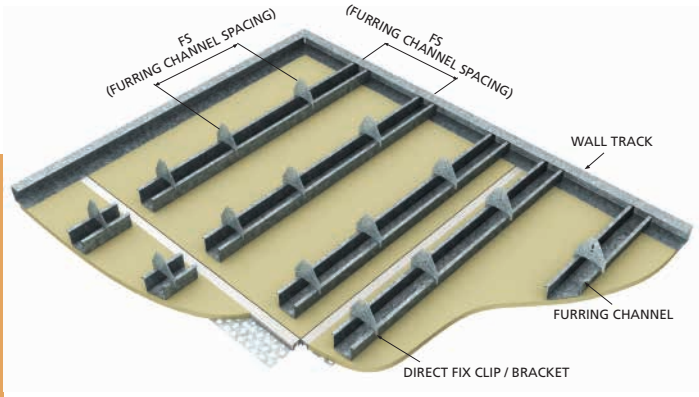

TABLE B2.5.1.3(B): FC DIRECT FIX PERIMETER FIXED SEISMIC JOINTED CEILING COMPONENTS

ITEM	DESCRIPTION		RONDO PARTS OPTIONS*
1	Wall Track, Angle		140, 141, 552, 559
2	Furring Channel		129, 155, 308, 308R
3	FC Direct Fix Bracket	Concrete Substrate	Table B2.5.1.1(A)
		Steel/Timber Substrate	156,226,394
4	Expansion Joint		P35
5	Lining		-

Notes:
1. Refer to Table B2.2 for more detail description of different part numbers.

As an example; assume the maximum ceiling grid length determine from Table B2.5.1.2(D) was 12m x 11.1m. Then for a seismic jointed direct fixed ceiling the **maximum** room size could be 24.0m x 22.2m, but only if the seismic joint was located 12m perpendicular to FC and 11.1m parallel to FC from wall.

If the seismic joint needed to be located 6m from one wall, to align with columns or other features, then the maximum room size in that direction would be limited to 18m x 17.1m as the seismic joint is not permitted to be more than 12m x 11.1m from the opposing wall.

SYSTEM SELECTION

For seismic jointed ceilings, the assessment of the ceiling grid follows the same as a perimeter fixed ceiling, with the following change in step 4.

Lay out the seismic joints in the ceiling and ensure the maximum distance between the perimeter walls and the seismic joints does not exceed the limit specified in Table B2.5.1.2(C) or (D).

The design Tables B2.5.1.2(A) and (B) have been prepared based on typical installation details. Accordingly, the ceiling grid is to be installed in accordance with the limitations provided in the Tables.

DESIGN EXAMPLE

In the previous example the maximum furring channel length was determined to be 11.1m. If it was found that the room size was 24m x 22m, then seismic jointing of the ceiling is a possible solution provided:

Step 1:

Determine the best orientation of the furring channels.

It is decided to run the furring channels parallel with the short direction (22m).

Step 2:

Determine seismic joint location along the furring channel.

The seismic joint can be located not greater than 11.1m from a wall, or conversely not closer than 10.9m(22-11.1) from a wall. Select the seismic joint location within these limits that best fit the structure.

Step 3:

Determine seismic joint location across the furring channel.

The seismic joint can be located not greater than 12.0m from either wall. Select the seismic joint location within these limits that best fit the structure and aesthetics.

Step 4:

Design summary

FC Direct Fix Bracket	- Rondo BG05 at 2060mm max centres
Furring channel	- Rondo #129 FC at 600mm max centres
	- Furring channels running in the short direction
Maximum Room Size	- 24m x 22m (seismic joint detailing required)

Step 10:

Standard details

See section B2.5.1.4

Step 11:

Installation procedure

See section B2.5.1.5

B2.5.1.4 STANDARD DETAILS

TABLE B2.5.1.4(A): STANDARD WALL TRACK DETAILS

WALL TRACK FIXING TO WALLS
Refer Table B2.4.3(A)

TABLE B2.5.1.4(B): STANDARD DIRECT FIX BRACKET DETAILS

FC DIRECT FIX BRACKET TO PRIMARY STRUCTURE			
DFC (a) 	*DFC(b)* 	*DFC(c)* 	*DFC(d)* 
1/CH06, 237, 129.308	*1/CH06, 157, 155*	*1/CH06, 239, 129.308*	*1/CH06, BG01, 129.308*
DFC(e) 	*DFC(f)* 	*DFC(g)* 	*DFCh)* 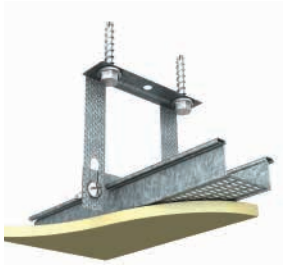
1/CH06, BG02, 129.308	*1/CH06, BG05, 129.308*	*1/CH06, FCINFIN0030, 129.308*	*1/CH06, FCINFIN0080, 129.308*
DFC(i) 	*DFC(j)* 	*DFC(k)* 	
2#10G Screws, 226, 129.308	*2#10G Screws, 156, 155*	*2#10G Screws, 394, 129.308*	

TABLE B2.5.1.4(C): STANDARD FIXED PERIMETER CONNECTION DETAILS

FIXED PERIMETER CONNECTIONS - SQUARE SET

FX-Fa - Fixed FC Connection - Low Strength

NOTE: FC MUST BE HARD UP AGAINST THE WALL TRACK

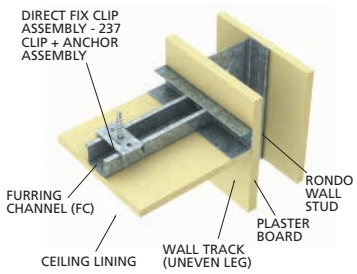



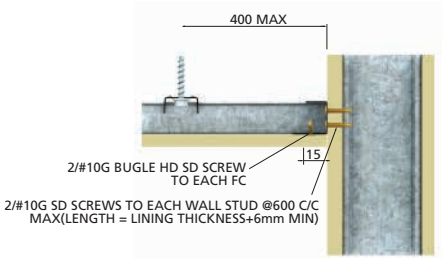

141, 129 or 308, 2/#10G Screw, 2/#10G Screw

FX-Fa-Fixed FC Connection - High Strength

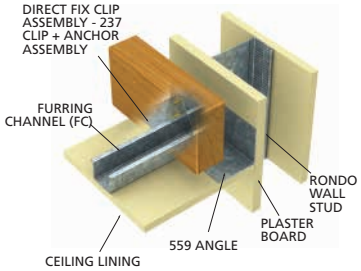





559, 2/#10G Screw, 2/#10G Screw

FIXED PERIMETER CONNECTIONS - SHADOWLINE

FX-Fb - Fixed FC Connection - Low Strength

NOTE: FC MUST BE HARD UP AGAINST THE WALL TRACK

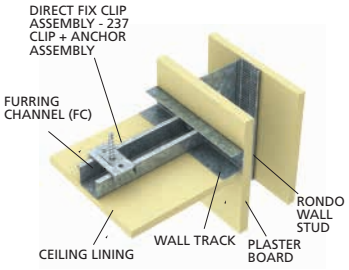

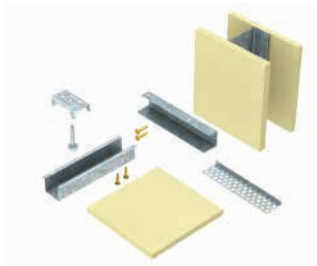

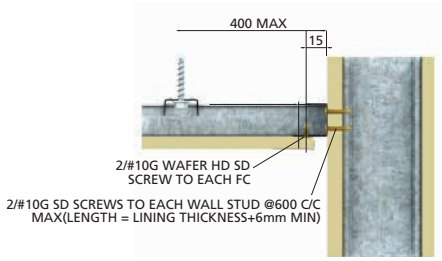

141, 129 or 308, 2/#10G Screw, 2/#10G Screw

FX-Fb- Fixed FC Connection - High Strength

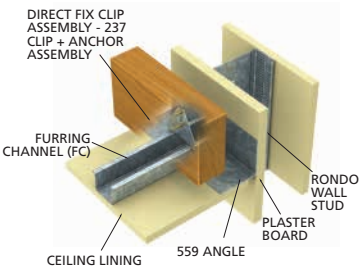

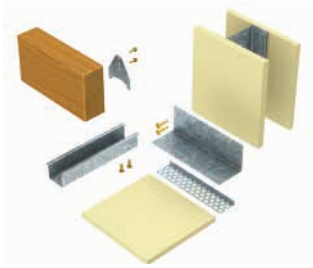

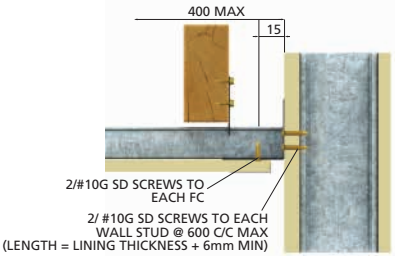

559, 2/#10G Screw, 2/#10G Screw

TABLE B2.5.1.4(D): STANDARD FREE PERIMETER CONNECTION DETAILS

FREE PERIMETER CONNECTIONS - SQUARE SET

FR-Fa - Free FC Connection

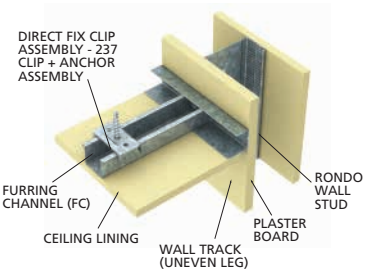



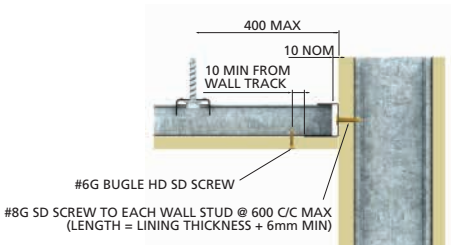

140 or 141 or 552 or 559, 129 or 308 ,1/#8G Screw

FR-La - Free Lining Connection

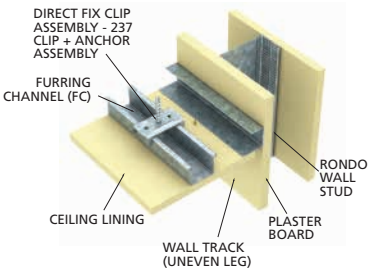



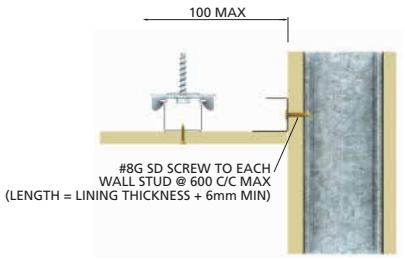

140 or 141 or 552 or 559, 1/#8G Screw

FREE PERIMETER CONNECTIONS - SHADOWLINE

FR-Lb - Free FC Connection

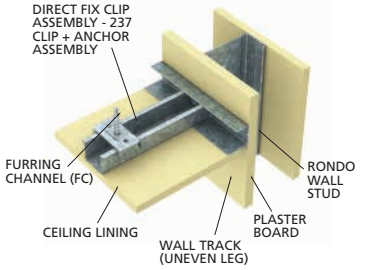



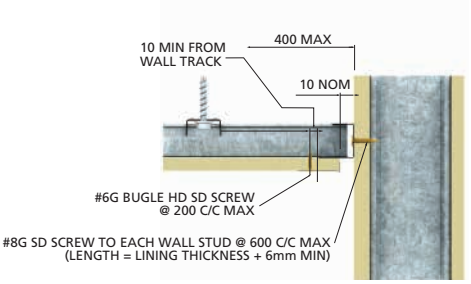

140 or 141 or 552 or 559, 129 or 308 ,1/#8G Screw

FR-Lb - Free Lining Connection

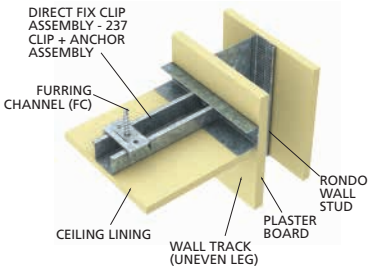



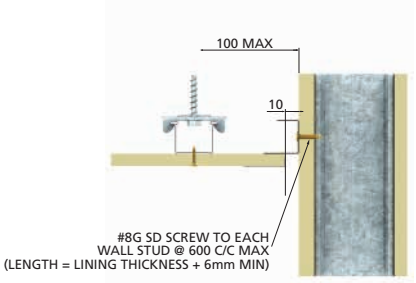

140 or 141 or 552 or 559, 1#/8G Screw

TABLE B2.5.1.4(E): SEISMIC JOINT DETAILS

SEISMIC JOINT - PERPENDICULAR TO FC

SJ1

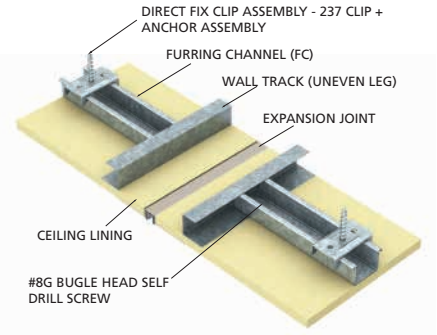

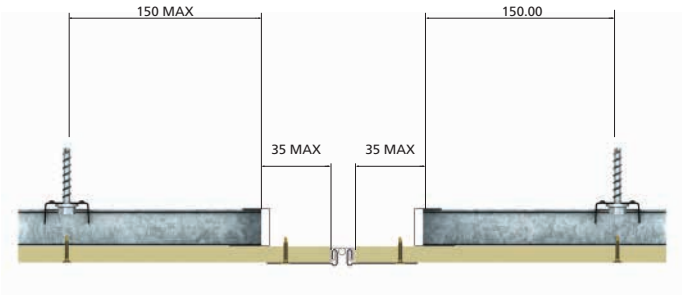

P35, 2/8G Screw

SEISMIC JOINT – PARALLEL TO FC

SJ2

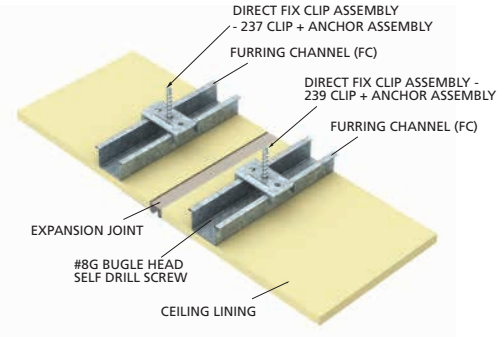

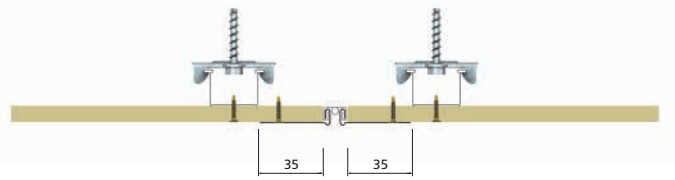

140/141/142, P35, 2/#8G Screw

TABLE B2.5.1.4(F): SPLICE JOINT DETAILS

SPLICE JOINT – FC

SPF

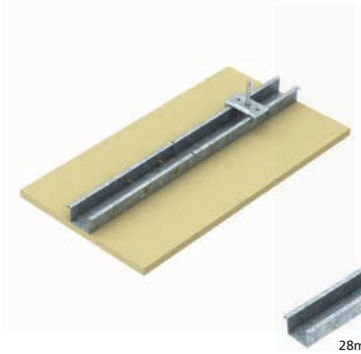

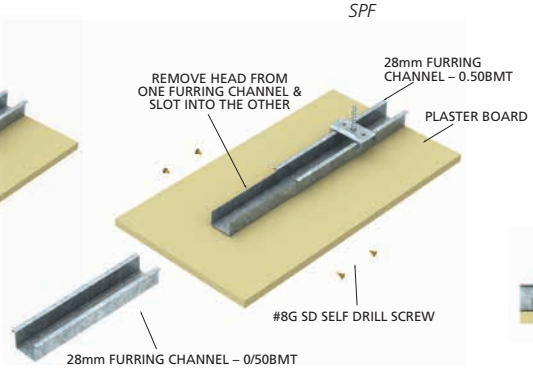



129, 2/#8G Screw

B2.5.1.5 INSTALLATION

INSTALLATION SUMMARY

Figure B2.5.1.5(A) below provides an overview of the installation procedure for a typical vented, direct fixed perimeter fixed ceiling. This ceiling is detailed in Figure B2.5.1.3(A), and is presented as a general guide only. Where variations in the ceiling construction are possible, they will be detailed separately.

FIGURE B2.5.1.5(A): STANDARD INSTALLATION DETAILS

<table>
<tr><td>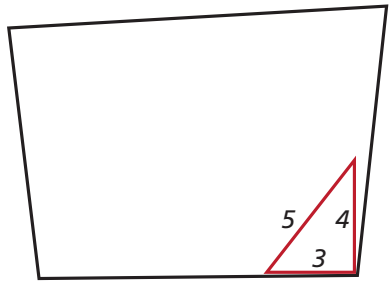
</td><td>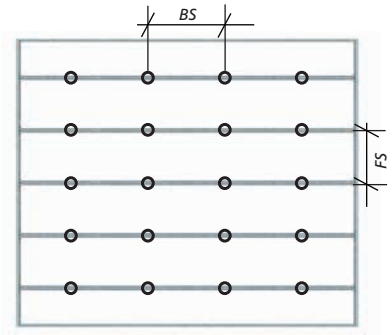
</td><td>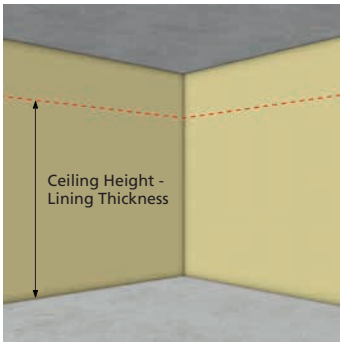
</td></tr>
<tr><td>1. Check room squareness</td><td>2. Plan the ceiling grid</td><td>3. Mark ceiling height around perimeter wall</td></tr>
<tr><td>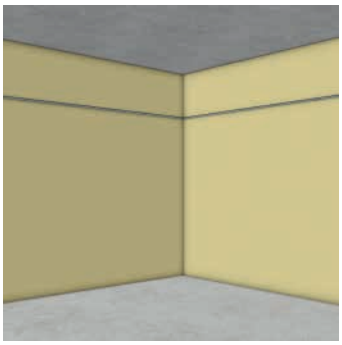</td><td>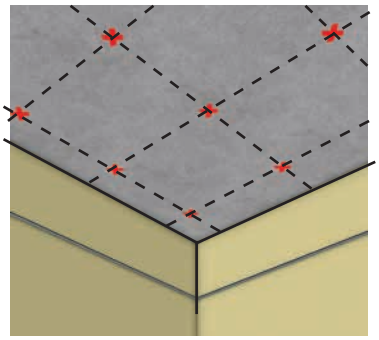</td><td></td></tr>
<tr><td>4. Install Wall Track</td><td>5. Mark direct fix clip location</td><td>6. Install direct fix clips</td></tr>
<tr><td></td><td></td><td></td><td></td></tr>
<tr><td>7. Install furring channels</td><td>8. FC splice joints</td><td>9. Check final leveling</td><td>10 & 11. Install Linings & Perimeter Finishes</td></tr>
</table>

INSTALLATION PROCEDURE

Step 1: Preliminaries

(1) The ceiling area should be checked to ensure it ready to proceed with installation including, but not limited to:

(1.1) The building's façade is functionally completed, and the area is weatherproof.

(1.2) The walls are square, parallel and plumb and have been constructed to plan.

(1.3) Visually check the structure that will support the ceiling grid to ensure it is complete and to assess suspension points.

Step 2: Plan The Ceiling Grid

(2) Based on the room size and edge distance plan the ceiling grid.

(2.1) Check for critical lighting conditions based on the furring channel and lining direction.

(2.2) Ensure first fixing point and Furring Channel are correctly spaced from the perimeter walls.

(2.3) Ensure the furring channel is running perpendicular to the supporting structure, and the support spacing is consistent with the ceiling design.

Never run the furring channel parallel with the roof purlins, floor joists or similar supporting members .

(2.4) Take note of any Access Panels, columns, lighting or other services and coordinate as necessary with the ceiling grid to avoid cutting the framing members.

Step 3: Mark Ceiling Height Around The Perimeter Wall

(3) Mark the finished ceiling height on the wall, as specified on the architectural plans.

(3.1) Transfer this set point to all other walls using a laser or other acceptable means.

Step 4: Install Wall Track

(4) Install the wall track as follows:

(4.1) Ensure the wall track is consistent with the ceiling design.

(4.2) Cutting the wall track should be minimised as much as possible.

(4.3) Fix the wall track to the framing members of the perimeter walls, aligning the wall track with the set out marked previously. Refer Table B2.5.1(A) to (C) for standard details and additional information.

(4.4) Wall track fixings to be as follows:

a. to concrete, refer section A5.1.1

b. to structural steel, refer section A5.1.2

c. to timber, refer section A5.1.3

(4.5) The first fixing to the wall track should be no more than 100mm from the end and thereafter , the fixings need to be spaced at not more than 600mm centres.



FIGURE B2.5.1.5(B): WALL TRACK TO CONCRETE WALL

Step 5: Mark Fixing Clip Position

(5) Mark the direct fixing clip position in the specified grid pattern.

(5.1) Ensure the suspension set out matches to the design span and spacing.

(5.2) Ensure the suspension set out is straight, consistent and uniform throughout the ceiling area.

(5.4) Allow for bridging to services or other obstructions that prevent the suspension being located at the correct set out. Alternatively, the furring channel may be shifted to avoid the conflict however; the span and spacing of the furring channel is not to increase.

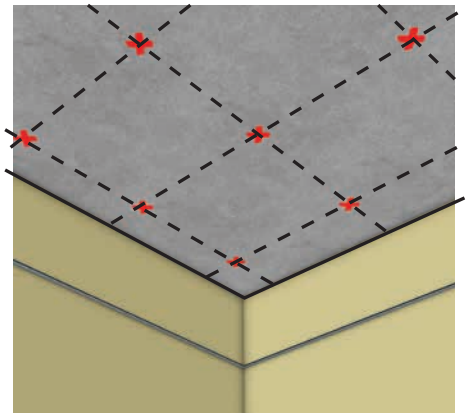

FIGURE B2.5.1.5(C): DIRECT FIX CLIP SET OUT

Step 6: Install Direct Fixing Clips

(6) Select the direct fix clip consistent with the structure as follows:

(6.1) To a concrete soffit select the fixing method from Table B2.5.1.1(A) depending on the required drop height.

For fixings to concrete refer section A5.1.1 for design limitations.

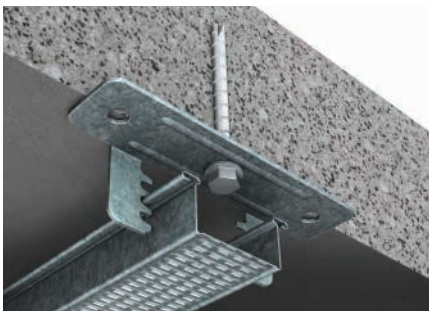

FIGURE B2.5.1.5(D): DIRECT FIX CLIP TO CONCRETE SOFFIT

(6.2) To steel purlins or the like, select the direct fix clip from Table B2.5.1.1(B) as appropriate.

For fixings to steel refer section A5.1.2.

(6.3) When fixing to roof purlins, never suspend the ceiling from the lip of the purlin as this introduces torsion into the purlin and could potentially cause premature failure.

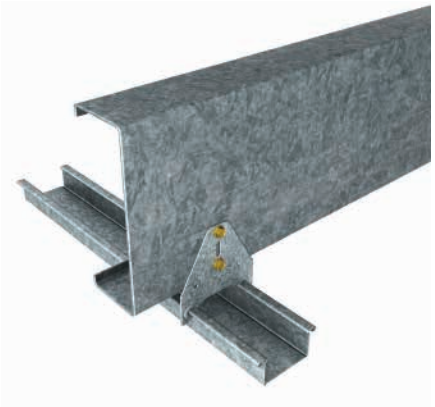

FIGURE B2.5.1.5(E): DIRECT FIX CLIP TO STEEL Z PURLIN

(6.4) To timber, select the direct fix clip from Table B2.5.1.1(B) as appropriate.

For fixings to timber refer section A5.1.3.

(6.5) When fixing to timber, never fix to the underside of the timber as this can result in screw pullout.

Step 7: Install Furring Channel (FC)

(7) Once all the direct fix clips are in position the furring channel can be installed as follows:

(7.1) Sit one end of the furring channel in the perimeter trim, and maintain the correct clearance as per the design for a fixed or free end as appropriate.

(7.2) Lock one side of the furring channel into the direct fix clip.

(7.3) Gently squeeze the furring channel sides together and roll the furring channel into the opposite side of the clip.

Never use mechanical or other means to install these products. If you cannot assemble by hand, there is possibly something amiss.

(7.4) Visually check to see the furring channel is fully engaged with the clip.

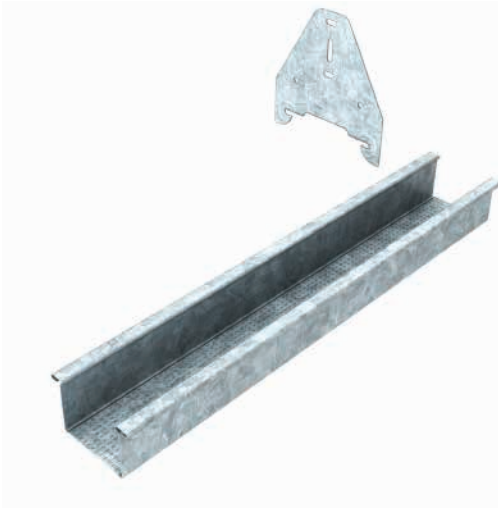

FIGURE B2.5.1.5(F): CHECK FC IS ENGAGED IN CLIP

(7.5) When starting a new run of furring channels, start with a cut length of furring channel such that the furring channel splice joints are staggered throughout the ceiling area.

Step 8: FC Splice Joint

(8) For correct seismic installation, the furring channel splice joint needs to be rigidly fixed to allow the seismic actions to be transferred back to the structure. The furring channel splice joint is to be made as follows:

(8.1) At the furring channel splice joint, one end of the furring channels is notched to allow it to nest into the abutting furring channel so the furring channel needs to be positioned such that there will be a minimum of 100mm overlap between the two sections.

(8.2) Cut the lip back approximately 100mm from one end of the furring channel and sit the cut end inside the abutting furring channel.

(8.3) Install 2/#10G screw through each side of the nested furring channels.

(8.4) Ensure all joints are staggered throughout the ceiling for stability, and to prevent progressive collapse of the ceiling.

(8.5) The furring channel splice should be located not greater than 200mm from a support location.

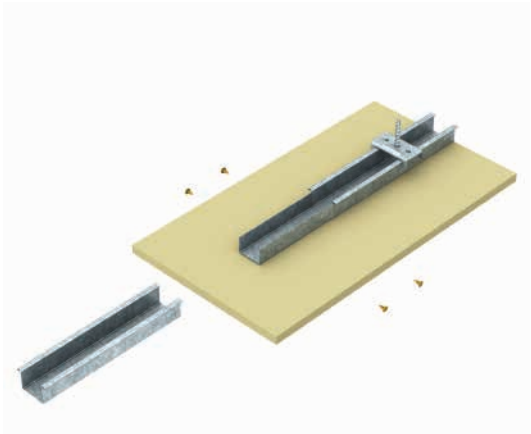

FIGURE B2.5.1.5(G): FC SPLICE

Step 9: Check The Final Levelling

(9) When all the furring channels are installed, the ceiling should be levelled using a string line, laser level or similar as appropriate.

(9.1) The ceiling level is to be set in accordance with the architectural plans.

Step 10: Installing Linings

(10) Install the ceiling linings as per the manufacturer's specifications.

For plasterboard, the long length of the board is to be installed perpendicular to the furring channels.

Step 11: Perimeter Finishes

(11) The ceiling perimeters shall be finished in accordance with the architectural specification and install appropriate perimeter trim as shown below.

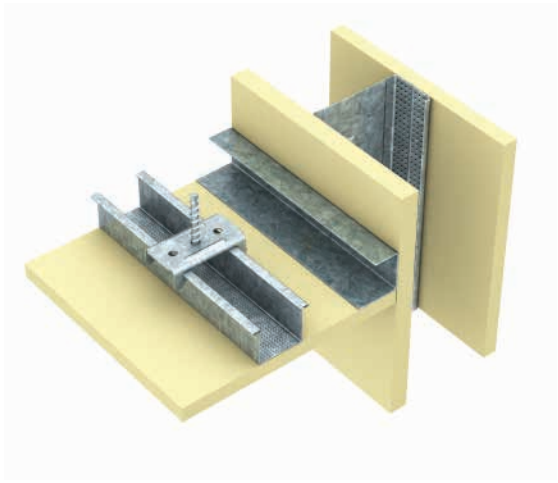

FIGURE B2.5.1.5(H): SQUARE SET CEILING JUNCTION

For the classic square set ceiling finish, the plasterboard should be terminated as close to the perimeter wall as possible, and the resulting joint set using either an internal corner bead or paper lined joint.

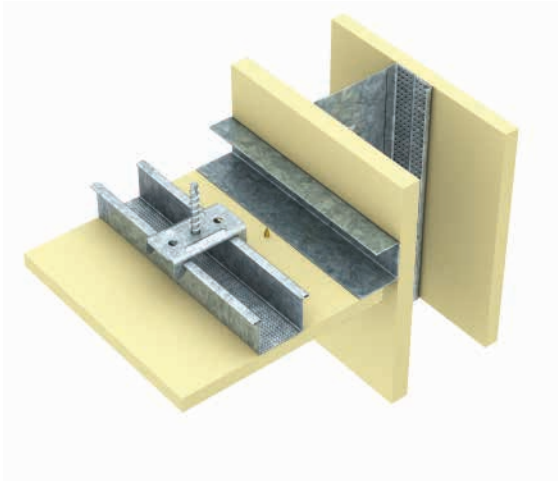

FIGURE B2.5.1.5(J): SHADOW LINE CEILING JUNCTION

For the shadow line ceiling finish, the plasterboard should be terminated approximately 10mm from the perimeter wall, and the resulting joint set a stopping angle appropriate for the board thickness.

This joint method is typically preferred as it allows for building movement without potentially cracking the joint.

The stopping angle is preferred as it allows the inter-storey drift to be accommodated without impacting the perimeter wall.

B2.5.2 TOP CROSS RAIL DIRECT FIXED CEILING

The Rondo KEY-LOCK® Concealed Ceiling Grid system can be direct fixed to the supporting structure even when using a Top Cross Rail. This requires a minimum plenum depth of 42mm, to ensure the system can be properly installed.

B2.5.2.1 DIRECT FIX BRACKET/CLIP SELECTION

Table B2.5.2.1(A) provides an overview of the various TCR direct fix clips that are available, including the minimum and maximum plenum depth achievable for each configuration. The plenum depth is based on the Rondo sections nominated and should be adjusted accordingly to the actual if different.

Refer to A5.1.1 for assumptions relating to the concrete substructure and A5.1.2 for assumption relating to steel substructure and A5.1.3 for assumption relating to timber substructure, to ensure compatibility. Where the design assumptions are not compatible refer to Rondo for a specific solution.

Rondo recommends all fasteners into concrete to comply with the requirements of NZS3101:1.

TABLE B2.5.2.1(A): DIRECT FIX CEILING SYSTEM SELECTION

Substrate	Assembly	Direct Fix Clip (Part No)	Suitable Plenum Depth (mm)		Adjustment (mm)
			Minimum	Maximum	
Concrete		124	101	101	0.00
		124N	105	105	0.00
		A124C(65) to A124C(180)	169	284	115.00
	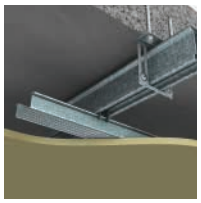	TCRINFIN090	43	93	50
Steel/Timber		166	95	95	0.00

Notes:
(1) Minimum and maximum plenum depth is for 127TCR and 129FC. If using different TCR or FC adjust the plenum depths as appropriate. Alternative TCR and FC are listed in Table B2.2(A), including appropriate dimensions.

B2.5.2.2 DESIGN DATA

The following table shall be used to determine the grid selection for preliminary design.

TABLE B2.5.2.2(A): TCR DIRECT FIX CEILING FRAMING - TCR, FC & DIRECT FIX CLIP SELECTION

Ultimate Wind Pressure (kPa)	Lining		Grid Size - Bracket Spacing (mm) x Top Cross Rail Spacing (mm) (BS x TS) Max							
	Description	Weight (kg/m²)	BRACKET FOR CONCRETE SUBSTRATE							BRACKET FOR STEEL SUBSTRATE
			124/124N	A124-C(65)	A124-C(85)	A124-C(100)	A124-C(120)	A124-C(150)	A124-C(180)	166
0.00	1/10mm or 1/13mm Standard Plasterboard	9.0	1200 x 1200	1200 x 1200	1200 x 1200	1200 x 1200	1200 x 1200	1200 x 1200	1200 x 1200	1200 x 1200
	1/13mm Plasterboad (Other)	11.5								
	Unknown Lining 1	13								
	Unknown Lining 2	16								
0.25	1/10mm or 1/13mm Standard Plasterboard	9.0	1200 x 1200	1200 x 1200	1200 x 1200	1200 x 1200	1200 x 1200	1200 x 1200	1200 x 1200	1200 x 1200
	1/13mm Plasterboad (Other)	11.5	1200 x 1200	1200 x 1200	1200 x 1200	1200 x 1200	1200 x 1200	1200 x 1200	1200 x 1200	1200 x 1200
	Unknown Lining 1	13	1200 x 1100	1200 x 1100	1200 x 1100	1200 x 1100	1200 x 1100	1200 x 1100	1200 x 1100	1200 x 1100
	Unknown Lining 2	16	1200 x 1000	1200 x 1000	1200 x 1000	1200 x 1000	1200 x 1000	1200 x 1000	1200 x 1000	1200 x 1000
0.50	1/10mm or 1/13mm Standard Plasterboard	9.0	900 x 1200	900 x 1200	900 x 1200	900 x 900	900 x 800	900 x 700	900 x 600	900 x 1200
	1/13mm Plasterboad (Other)	11.5	900 x 1200	900 x 1200	900 x 1200	900 x 1000	900 x 900	900 x 700	900 x 600	900 x 1200
	Unknown Lining 1	13	900 x 1200	900 x 1200	900 x 1200	900 x 1000	900 x 900	900 x 800	900 x 600	900 x 1200
	Unknown Lining 2	16	900 x 1200	900 x 1200	900 x 1200	900 x 1000	900 x 900	900 x 800	900 x 700	900 x 1200
0.75	1/10mm or 1/13mm Standard Plasterboard	9.0	900 x 800	900 x 800	900 x 700	900 x 600	600 x 800	600 x 700	N/A	900 x 800
	1/13mm Plasterboad (Other)	11.5	900 x 800	900 x 800	900 x 700	900 x 600	600 x 800	600 x 700	N/A	900 x 800
	Unknown Lining 1	13	900 x 800	900 x 800	900 x 700	900 x 600	600 x 800	600 x 700	N/A	900 x 800
	Unknown Lining 2	16	900 x 900	900 x 900	900 x 800	900 x 600	900 x 600	600 x 700	N/A	900 x 900
1.00	1/10mm or 1/13mm Standard Plasterboard	9.0	600 x 900	600 x 900	600 x 800	600 x 600	N/A	N/A	N/A	600 x 900
	1/13mm Plasterboad (Other)	11.5	600 x 900	600 x 900	600 x 800	600 x 600	N/A	N/A	N/A	600 x 900
	Unknown Lining 1	13	600 x 900	600 x 900	600 x 800	600 x 600	N/A	N/A	N/A	600 x 900
	Unknown Lining 2	16	600 x 900	600 x 900	600 x 800	600 x 600	N/A	N/A	N/A	600 x 900

Notes:

1. Above table is only valid when using the following components:

Wall Track/Angle	*- 140/141/559*
Top Cross Rail	*- 127*
Furring Channel (FC)	*- 129 @ 600mm max centres*
TCR, FC Interchange clip	*- 139*

2. Furring channel should be spaced at 450mm for 10mm plasterboard.

3. Contact Technical Services for any other lining configuration listed above.

4. Serviceability limit state deflection is limited to the following.

L/200 for $G_{max}+W_{ser,dn}$ and $0.9G_{min}+W_{ser,up}$

L/360 for G_{max}

5.Connection to the primary structure has been checked in accordance with Section A5.1 as applicable.

6.Where the actual installation is not in accordance with the design assumptions above contact Rondo for a specific design solution.

7. Table considers grid weight as dead loads in addition to the lining weight specified.

8. The table considers nominated wind pressure being applied in either negative or positive directions. The grid set-out may be increased in some circumstances where uplift pressures can be equalised, for example, when a key-lock ceiling shares a common plenum space with an exposed tile grid ceiling. Refer to B1.3.3 or Rondo for further confirmation.

B2.5.2.3(A) TCR DIRECT FIX PERIMETER FIXED CEILING

This system is similar to the B2.4.1(A) and B2.4.2(A) except the Top Cross Rail is direct fixed to the structure. Accordingly, further reference can be made to these systems where appropriate.

SYSTEM LAYOUT

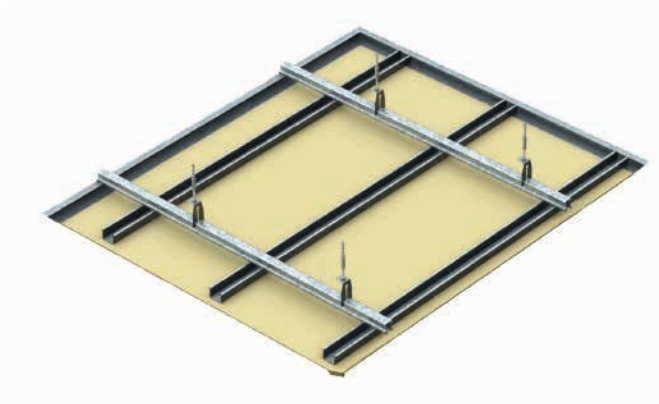

FIGURE B2.5.2.3(A): TCR DIRECT FIX PERIMETER FIXED CEILING

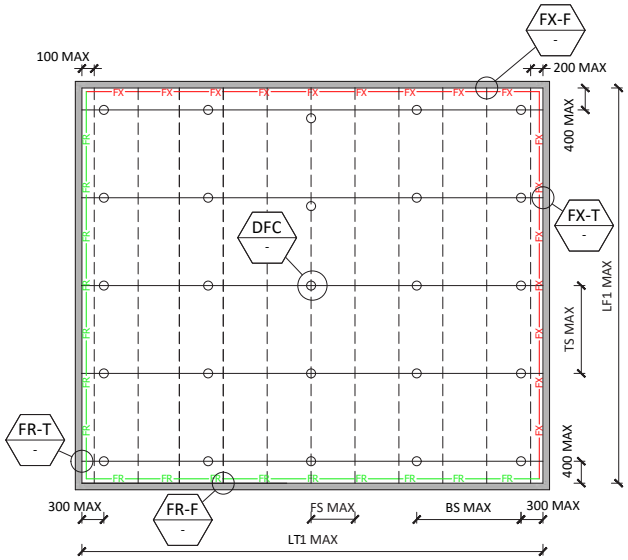

TYPICAL REFLECTED CEILING PLAN

SCALE NTS

FIGURE B2.5.2.3(A): TCR DIRECT FIX PERIMETER FIXED CEILING

Notes:
1. Refer Table B2.4.3(D) for FX-F and FX-T details.
2. Refer Table B2.4.3(E) for FR-F and FR-T details.
3. Refer Table B2.5.2.4(B) for TCR direct fix options DFC.

TABLE B2.5.4(C): TCR DIRECT FIX PERIMETER FIXED CEILING COMPONENTS

ITEM	DESCRIPTION		RONDO PARTS OPTIONS*
1	Wall Track		559 + 140, 559 + 141, 559 + 142
2	Top Cross Rail		127, 127R, 128, 128R
3	FC/TCR Interchange Clip		119, 139, 159, 238
4	Furring Channel		129, 155, 308, 308R
6	TCR Direct Fix Bracket	Concrete Substrate	124, 124N, A124-C
		Steel/Timber Substrate	166
8	Lining		-

Notes:
1. Refer Table B2.2 for more detail description of different part numbers.

SYSTEM SELECTION

For perimeter fixed ceilings, the assessment of the ceiling grid is as follows:

a. Determine the plenum depth required and the supporting structure construction (i.e purlin or concrete slab).

b. Refer to Table B2.5.2.1(A) and select an appropriate clip/bracket.

c. Refer to Table B2.5.2.2(A) and check the appropriate section of the table matching to the design internal pressure previously determined. Scroll across the table to determine the ceiling grid components, the member spans and spacings and the subsequent clip/bracket set out.

d. Check the maximum length of the ceiling grid does not exceed the limits specified in Table B2.4.1(B).

e. Check the perimeter walls or bulkheads can restrain the ceiling grid.

The design Tables B2.5.2(A) have been prepared based on typical installation details. Accordingly, the ceiling grid is to be installed in accordance with the limitations provided in the Tables.

DESIGN EXAMPLE

Internal suspended ceiling design is required for a 30m high apartment located in Dunedin. The apartment has sliding doors to the exterior. Ceiling is located 28m above the ground floor and lined with 1 layer of 13mm plasterboard. Ceiling plenum depth is 150mm and it is attached to a slab above. Site sub-soil class for earthquake action is C. Importance level of the building has been stated as IL2 in structural notes.

Step 1:

Determine the building parameters for wind and seismic events.

Importance Level - 2

Region - NZ2 (Refer Figure A3.4.2.1(A))

Terrain Category - 3 (Refer Figure A3.4.2.1(B))

Building Height - 30m

Site sub-soil class - C

Step 2:

Determine whether you can use this manual or need specific design.

With reference to Figure B1.1.1(B) this manual can be used for the preliminary design.

Step 3:

Select direct fix clip.

From Table B2.5.2.1(A), for plenum depth 150mm A124-C(65) shall be used.

Step 4:

Determine basic wind pressure (pu).

Building is greater than 25m, therefore use floor height to determine the basic pressure (refer figure A3.4.2.1(C).

For Region NZ2, IL = 2, TC =3 and Floor height = 28m

P_u = 1.215 kPa

Step 5:

Determine internal pressure on ceiling (p_n) for ULS.

Apartment has sliding doors therefore the building type will be R-TYP 3 (Ref figure A3.4.3.1(A).

Ceiling net pressure coefficient will be determined from figure B1.3.3(E) as below.

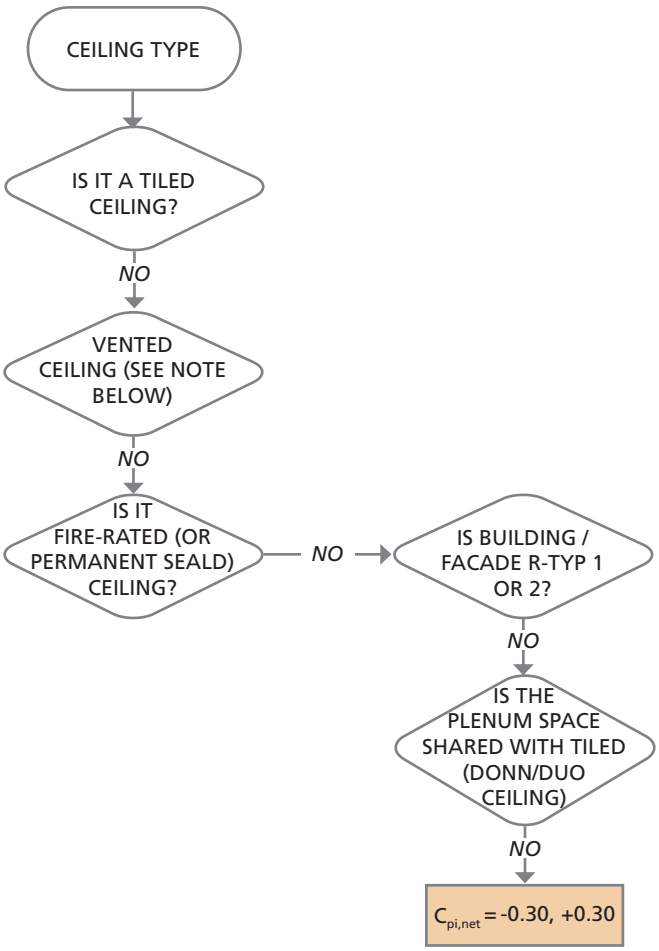

$C_{pi,net}$ = -0.3,+0.3

Internal pressure $p_n = p_u C_{pi,net}$

= 1.215 x (-0.3) = -0.365 kPa (Suction)

= 1.215 x (+0.3) = +0.365 kPa (Pressure)

Step 6:

Determine ceiling framing configuration.

By using Table B2.5.2.2(A).

Internal pressure derived from step 5 is 0.365 kPa therefore use next closest pressure 0.50 kPa.

For 1 layer of 13mm Standard Plasterboard, 0.75 kPa ceiling pressure and A124-C(65) the grid configuration will be as follows.

BS x TS - 900 x 1200 max

Bracket spacing (BS) - 900mm

Top Cross Rail Spacing (TS) - 1200mm

Step 7:

Determine Seismic action.

Following parameters are given in the above example.

- Location - Dunedin
- Site sub-soil class - C
- Importance level - 2

From Table A3.5.2(B), hazard design factor(Z) for Dunedin will be 0.13.

By referring Figure A3.5.2(C1) and (C2) for IL2, Z=0.13 and site sub soil classification C, F_{ph} will be 1.04g.

Step 8:

Determine maximum room size.

Per Table B2.4.2(C1) and (C2), TCR at 1200mm x FC at 600mm, 1 layer of 13mm Standard Plasterboard and F_{ph} = 1.04g, maximum room size will be 8m x 12m.

If the room size is greater than 8m along TCR x 12m along FC then go to section B2.5.2.3(B) for seismic jointed ceiling.

Step 9:

Design summary

Track/TCR	*- 141 Track + 559 Angle*
Track/FC	*- 141 Track + 559 Angle*
TCR Direct Fix Bracket	*- Rondo #A124-C(65) at 900mm max centres*
Top Cross Rail	*- Rondo #127 TCR at 1200mm max centres*
Furring channel	*- Rondo #129 FC at 600mm max centres*
Maximum Room Size TCR x FC	*- 8m x 12m*

Step 10:

Detail drawings

See section B2.5.2.4

Step 11:

Installation procedure

See section B2.5.2.5

B2.5.2.3(B) TCR DIRECT FIX SEISMIC JOINTED CEILING

This system is similar to the B2.4.1(B) and B2.4.2(B) except the Top Cross Rail is direct fixed to the structure. Accordingly, further reference can be made to these systems where appropriate.

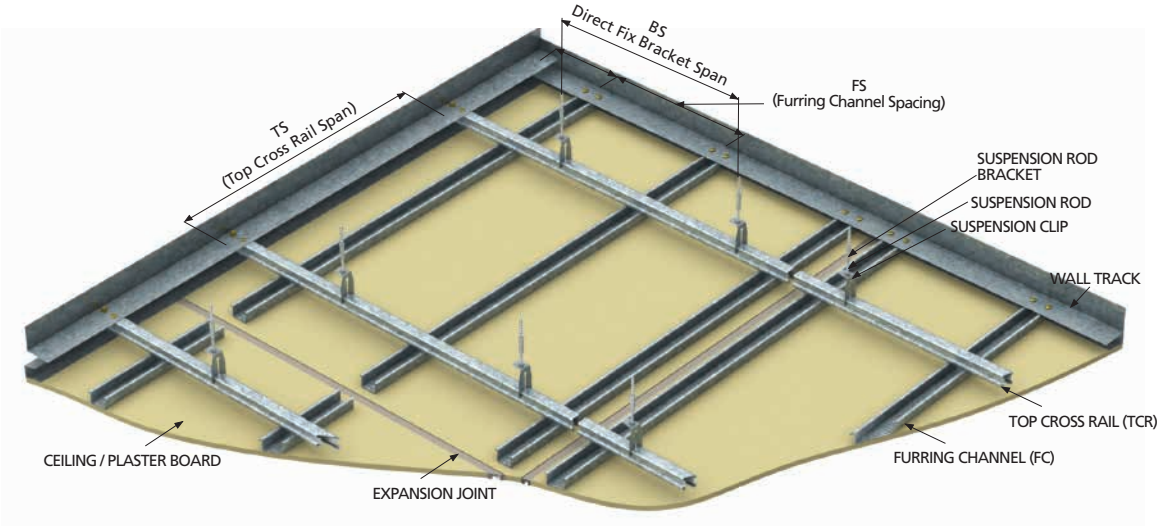

FIGURE B2.5.2.3(A): TCR DIRECT FIX SEISMIC JOINTED CEILING

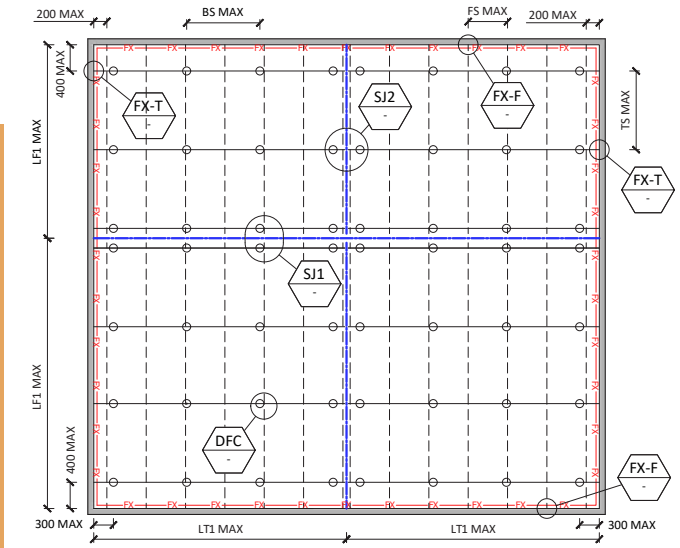

TYPICAL REFLECTED CEILING PLAN
SCALE NTS

FIGURE B2.5.2.3(B): TCR DIRECT FIX SEISMIC JOINTED CEILING

Notes:
1. Refer Table B2.4.3(D) for FX-F and FX-T details.
2. Refer Table B2.4.3(F) for SJ1 and SJ2 details.
3. Refer Table B2.4.3(G) for SPF and SPT details.
4. Refer Table B2.5.2.4(B) for TCR direct fix options DTTB.

TABLE B2.5.2.3(A): TCR DIRECT FIX PERIMETER FIXED CEILING COMPONENTS

ITEM	DESCRIPTION		RONDO PARTS OPTIONS*
1	Wall Track		559 + 140, 559 + 141, 559 + 142
2	Top Cross Rail		127, 127R, 128, 128R
3	FC/TCR Interchange Clip		119, 139, 159, 238
4	Furring Channel		129, 155, 308, 308R
6	TCR Direct Fix Bracket	Concrete Substrate	124, 124N, A124-C
		Steel/Timber Substrate	166
7	Expansion Joint		P35
8	Lining	-	

Notes:
1. Refer Table B2.2 for more detail description of different part numbers.

B2.5.2.4 STANDARD DETAILS

TABLE B2.5.2.4(A): STANDARD WALL TRACK DETAILS

WALL TRACK FIXING TO WALLS			
WT (a) - Stud Wall (fixed end)	*WT (b) - Stud Wall (free end)*	*WT (c) - Timber Wall (fixed/free end)*	*WT (d) - Concrete Wall (fixed/free end)*
		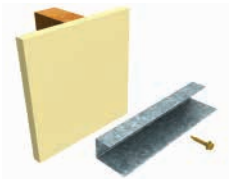	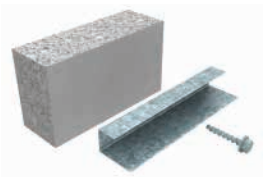
140/141/142, 2#10G Screw	*140/141/142, 1#8G Screw*	*140/141/142, 1#12G Type 17 Wood Screw*	*140/141/142, 1/CH06*

TABLE B2.5.2.4(B): TCR DIRECT FIX OPTIONS TO CONCRETE

TCR DIRECT FIX BRACKET TO CONCRETE STRUCTURE			
DFC(a)	*DFC(b)*	*DFC(c)*	*DFC(d)*
			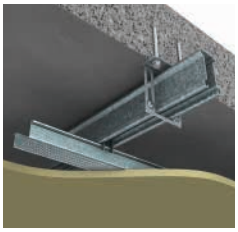
1/CH06, 124, 127/128	*1/CT06, 124N, 127/128*	*1/A124-C, 127/128*	*2/CH06, TCRINFIN090, 127/128*
DFC(e)		*DFC(F)*	
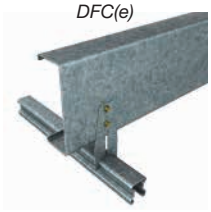			
166, 2/10G SCREWS, 127/128		*166, 2/10G SCREWS, 127/128*	

Note: Configurations shown for fixing to concrete are suitable for seismic C1 applications only.

TABLE B2.5.2.4(C): STANDARD FIXED PERIMETER CONNECTION DETAILS

FIXED PERIMETER CONNECTIONS - SQUARE SET		
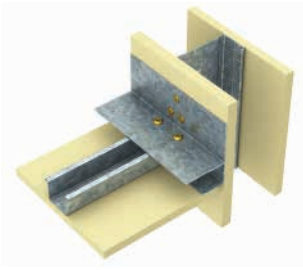	*FX-F - Fixed FC Connection* 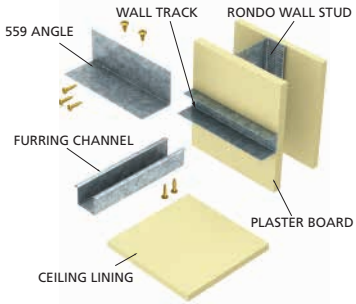	*NOTE: FC MUST BE HARD UP AGAINST THE WALL TRACK* 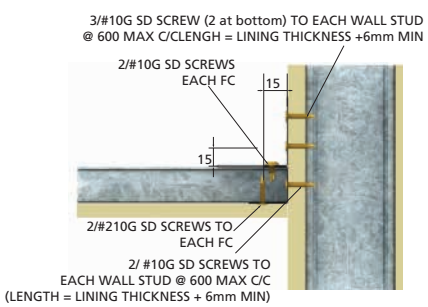
559, 140/141/142, 125/127/128, 3/#10G SD Screw (2 at bottom), 2/#10G SD Screw, 1/8G SD Screw, 2/#10G SD Screw		

■ **TABLE B2.5.2.4(C): STANDARD FIXED PERIMETER CONNECTION DETAILS (CONTINUED)**

FIXED PERIMETER CONNECTIONS - SQUARE SET

FX-T - Fixed TCR Connection

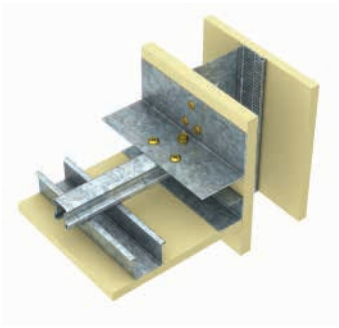

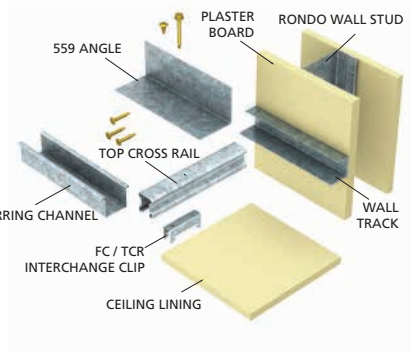

NOTE: TCR MUST BE HARD UP AGAINST THE WALL LINING

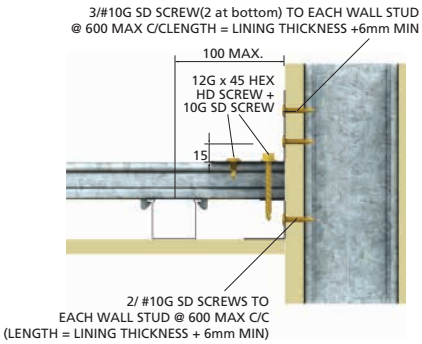

559, 140/141/142, 125/127/128, 3/#10G SD Screw (2 at bottom), 12G x 45 HEX HD SD Screw + 10G SD Screw, 1/10G SD Screw

FIXED PERIMETER CONNECTION - SHADOWLINE SET

FX-F - Fixed FC Connection

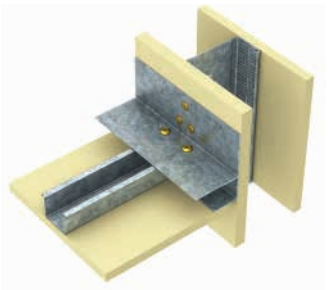

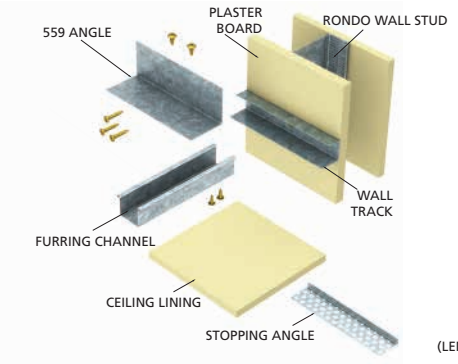

NOTE: FC MUST BE HARD UP AGAINST THE WALL TRACK

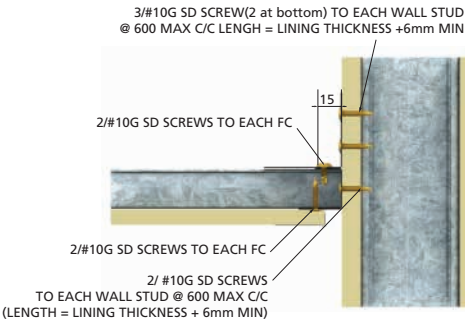

559, 140/141/142, 129/308, P25/P26/P27/P28, 2/#10G Screw, 2/#10G Screw

FIXED PERIMETER CONNECTION - SHADOWLINE SET

FX-T - Fixed TCR Connection

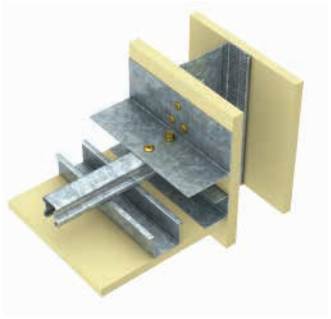

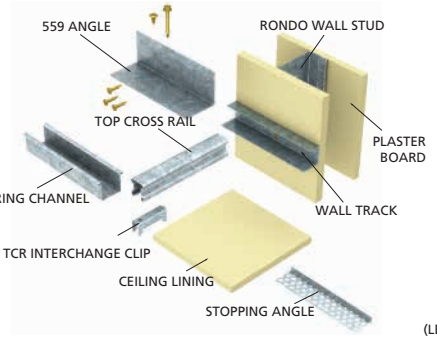

NOTE: TCR MUST BE HARD UP AGAINST THE WALL LINING

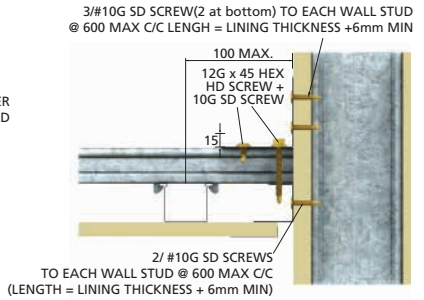

559, 140/141/142, 125/127/128, 139, 129/308, P25/P26/P27 or P28, 2/#10G Screw, 1/#6G Screw

TABLE B2.5.2.4(D): STANDARD FREE PERIMETER CONNECTION DETAILS

FREE PERIMETER CONNECTIONS - SQUARE SET

FR-F - Free FC Connection

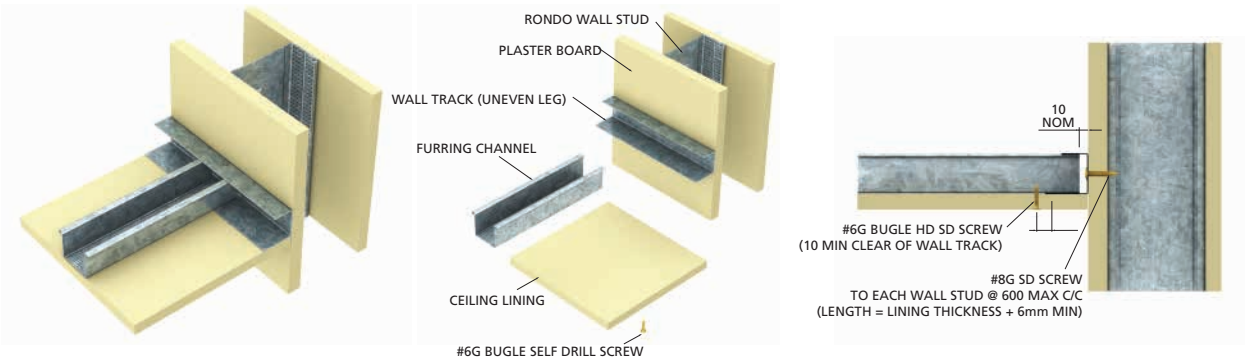

140 or 141 or 142, 129 or 308, 1/#8G Screw, 1/#6G Screw

FREE PERIMETER CONNECTIONS - SQUARE SET

FR-T - Free TCR Connection

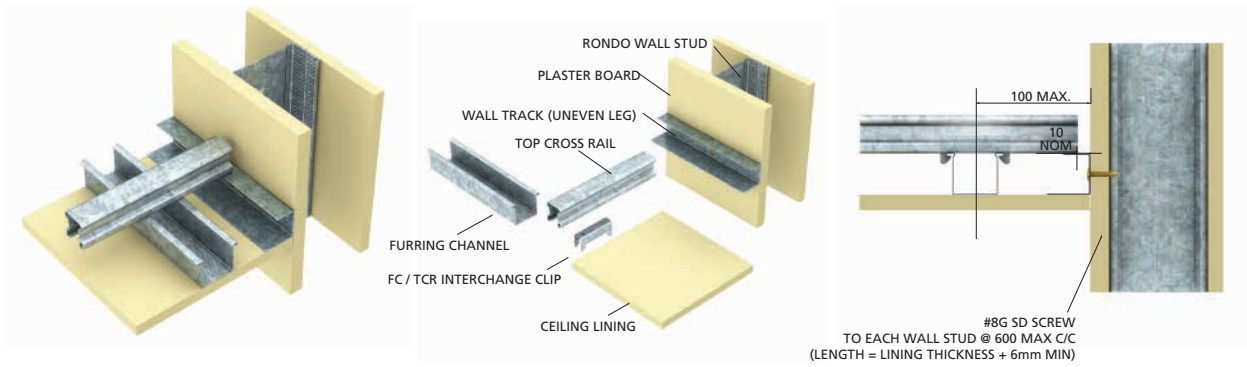

140 or 141 or 142, 125 or 127 or 128, 139, 129 or 308, 1/8G Screw

FREE PERIMETER CONNECTION - SHADOWLINE SET

FR-F - Free FC Connection

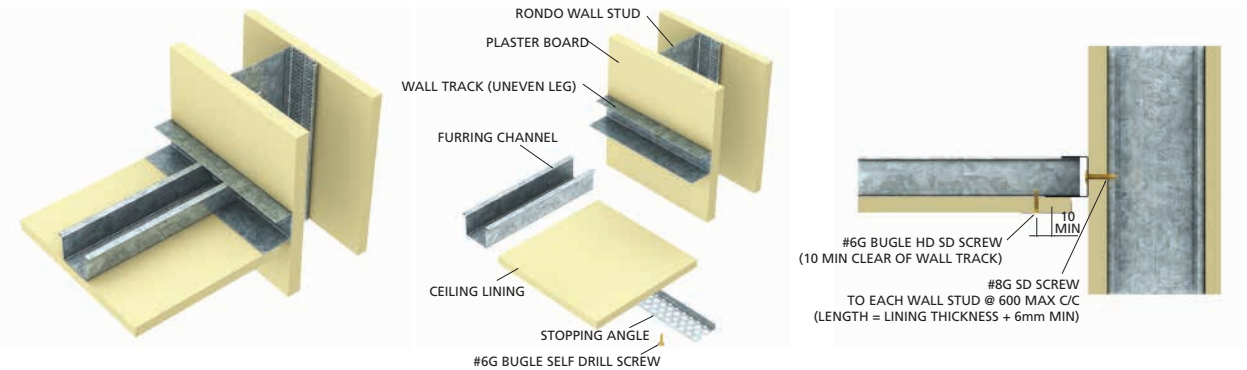

140 or 141 or 142, 139, 129 or 308, P25 or P26 or P27 or P28, 1/#8G Screw, 1/#6G Screw

TABLE B2.5.2.4(D): STANDARD FREE PERIMETER CONNECTION DETAILS (CONTINUED)

FREE PERIMETER CONNECTION - SHADOWLINE SET

FR-T - Free TCR Connection

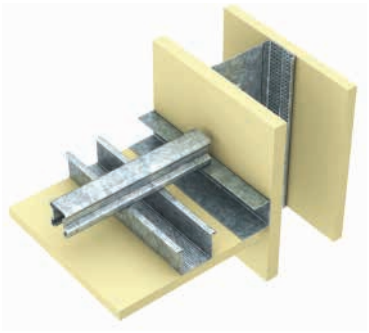

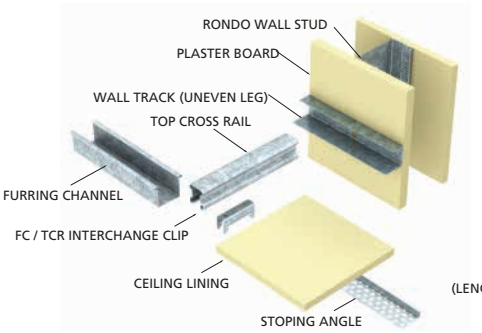

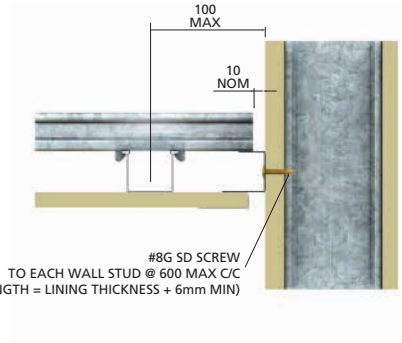

140 or 141 or 142, 125 or 127 or 128, 139, 129 or 308, P25 or P26 or P27 or P28, 1/#8G Screw

TABLE B2.5.2.4(E): SEISMIC JOINT DETAILS

SEISMIC JOINT - PARALLEL TCR

SJ1

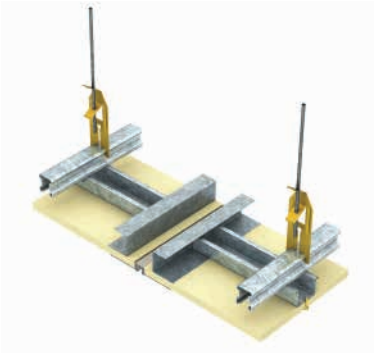

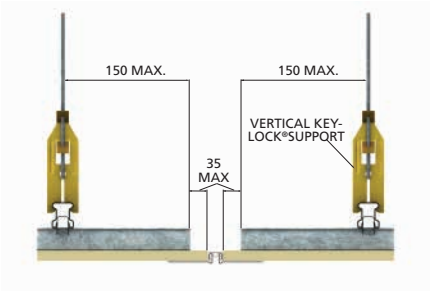

140/141/142, P35, 2/#8G Screw

TABLE B2.5.2.4(F): SPLICE JOINT DETAILS

SEISMIC JOINT - PARALLEL TO FC

SJ2

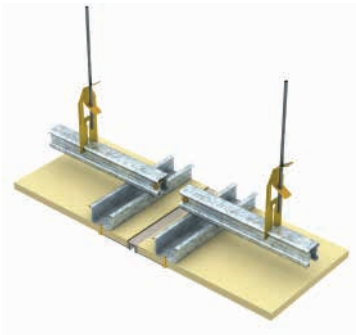

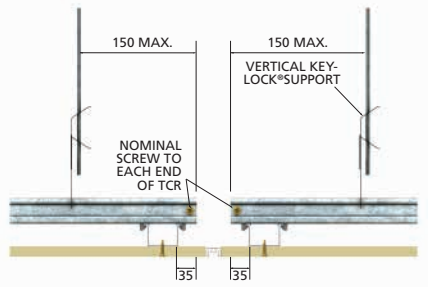

P35, 2/8G Screw

TABLE B2.5.2.4(G): SPLICE JOINT DETAILS

SPLICE JOINT – FC

SPF

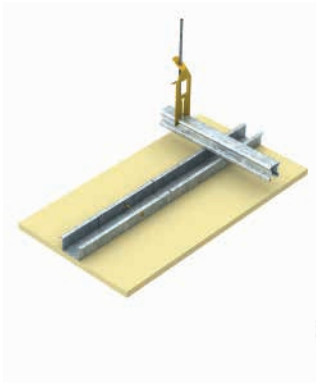

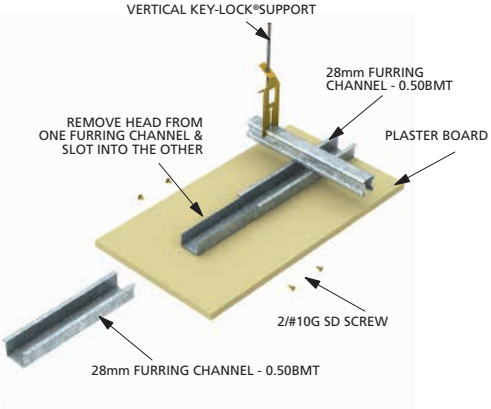

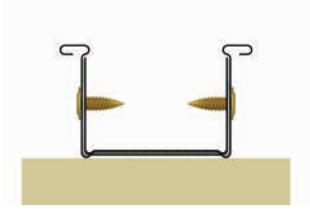

TCR SPACING mm	MAX DISTANCE "X"mm
600	150
900	225
1200	300

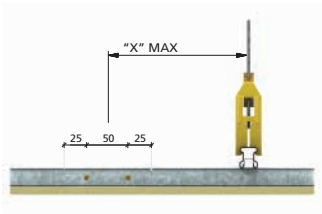

129, 2/#8G Screw

SPLICE JOINT - TCR

SPT

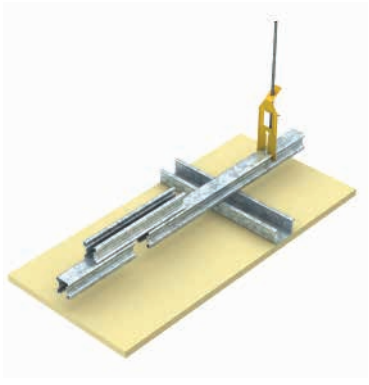

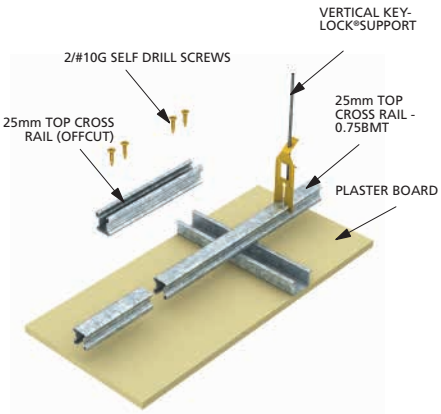



TCR SPACING mm	MAX DISTANCE "X" mm
600	150
900	225
1200	300
1500	375

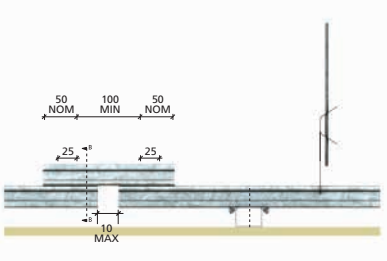

127/128, 2/#8G Screw

B2.5.2.5 INSTALLATION

INSTALLATION OVERVIEW

Figure B2.5.2.5(A) below provides an overview of the installation procedure for a typical direct fixed perimeter fixed ceiling. This ceiling is detailed in Figure B2.5.2.3(A), and is presented as a general guide only. Where variations in the ceiling construction are possible, they will be detailed separately.

<table>
<tr><td>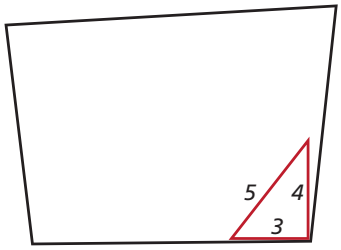
</td><td>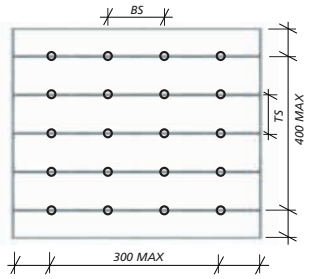
</td><td>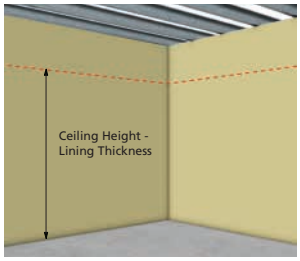
</td></tr>
<tr><td>1. Check room squareness</td><td>2. Plan the ceiling grid</td><td>3. Mark ceiling height around perimeter wall</td></tr>
<tr><td></td><td>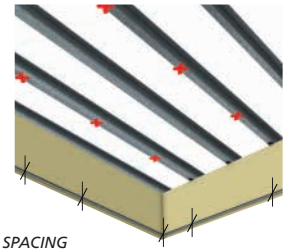
</td><td>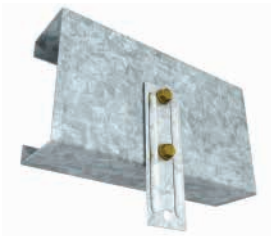</td></tr>
<tr><td>4. Install wall track</td><td>5. Mark clip position</td><td>6. Install Direct Fix Clip</td></tr>
<tr><td></td><td>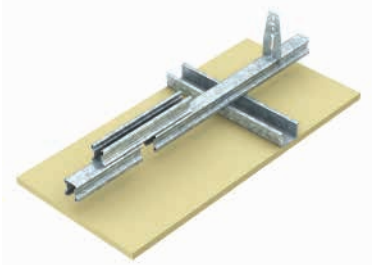</td><td></td></tr>
<tr><td>7. Secure the top cross rails</td><td>8. TCR splice joint</td><td>9. Fixing Furring Channel</td></tr>
<tr><td>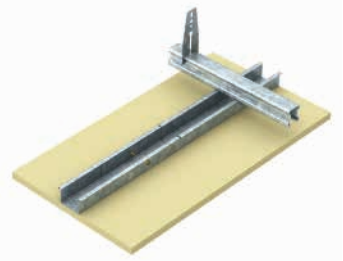</td><td></td><td>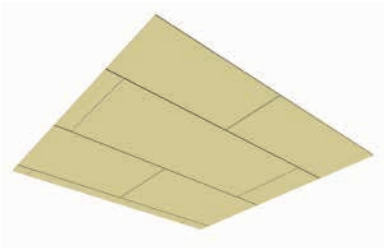</td></tr>
<tr><td>10. FC splice joint</td><td>11. Check final levelling</td><td>12. Install Lining</td></tr>
<tr><td>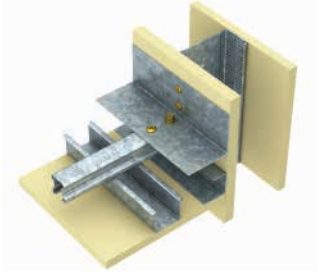</td><td></td><td></td></tr>
<tr><td>13. Perimeter Finishes</td><td></td><td></td></tr>
</table>

FIGURE B2.5.2.5(A): INSTALLATION PROCEDURE

INSTALLATION PROCEDURE

Step 1: Preliminaries

(1) The ceiling area should be checked to ensure it ready to proceed with installation including, but not limited to:

(1.1) The building's façade is functionally completed, and the area is weatherproof.

(1.2) The walls are square, parallel and plumb and have been constructed to plan.

(1.3) Visually check the structure that will support the ceiling grid to ensure it is complete and to assess suspension points.

Step 2: Plan The Ceiling Grid

(2) Based on the room size and edge distance plan the ceiling grid.

(2.1) Ensure that the first hanger will not be more than 300mm from the TCR end and the first TCR will be no more than 400mm from the wall in the FC direction.

(2.2) Check for critical lighting conditions based on the grid and lining direction.

(2.3) For purlin suspension, ensure the TCR is running perpendicular to the roof purlins, and the purlin spacing is consistent with the ceiling design.

Never run the TCR parallel with the roof purlins, floor joists or similar supporting members .

(2.4) Take note of any Access Panels, columns, lighting or other services and coordinate as necessary with the ceiling grid to avoid cutting the framing members.

Step 3: Mark Ceiling Height Around The Perimeter Wall

(3) Mark the finished ceiling height on the wall, as specified on the architectural plans.

(3.1) Transfer this set point to all other walls using a laser or other acceptable means.

Step 4: Install Wall Track

(4) Install the wall track as follows:

(4.1) Ensure the wall track is consistent with the ceiling design.

(4.2) Cutting the wall track should be minimised as much as possible.

(4.3) Fix the wall track to the framing members of the perimeter walls, aligning the wall track with the set out marked previously. Refer Table B2.4.3(A) for standard details and additional information.

(4.4) Wall track fixings to be as follows:

a. to concrete, refer section A5.1.1.

b. to structural steel, refer section A5.1.2.

c. to timber, refer section A5.1.3.

(4.5) the first fixing to the wall track should be no more than 100mm from the end and thereafter , the fixings need to be spaced at not more than 600mm centres.



FIGURE B2.5.2.5(B): WALL TRACK TO CONCRETE WALL

Step 5: Mark Clip Position

(5) Mark direct fix clip position in the specified grid pattern.

(5.1) Ensure the suspension set out matches to the design span and spacing of the TCR.

(5.2) Ensure the suspension set out is straight, consistent and uniform throughout the ceiling area.

(5.3) Allow for bridging to services or other obstructions that prevent the suspension being located at the correct set out. Alternatively, the ceiling grid may be shifted to avoid the conflict however; the span and spacing of the TCR is not to increase.

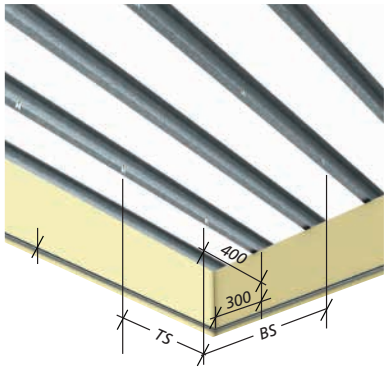

FIGURE B2.5.2.5(C): FIRST SUSPENSION POINT

Step 6: Install The Direct Fix Clip

(6) Select the direct fix clip consistent with the structure to which it will be attached:

(6.1) To a concrete refer to Table B2.5.2.1(A).

For fixings to concrete refer section A5.1.1 for design limitations.



FIGURE B2.5.2.5(D): 124 DIRECT FIX CLIP FOR TCR TO CONCRETE

(6.2) To steel purlins or the like, refer to Table B2.5.2.1(A).

For fixings to steel refer section A5.1.2.

When fixing to roof purlins, never suspend the ceiling from the lip of the purlin as this introduces torsion into the purlin and could potentially cause premature failure.



FIGURE B2.5.2.5(E): DIRECT FIX CLIP TO STEEL Z PURLIN

(6.3) To timber, refer to Table 2.5.5(B).
For fixings to timber refer section A5.1.3.

(6.4) When fixing to timber, never fix to the underside of the timber as this can result in screw pullout.

Step 7: Secure The Top Cross Rails (TCR)

(7) Ensure the selected Top Cross Rail (TCR) is in accordance with the design, and install as follows:

(7.1) Allow one end of the TCR to sit on the perimeter wall channel.

(7.2) At the opposing end of the TCR, place one side of the TCR into the suspension clip, such that it is partially restrained by the "tooth" of the suspension clip.

(7.3) Using a rolling action, rotate the TCR into the clip. The clip will spring open and close once the TCR is in place.

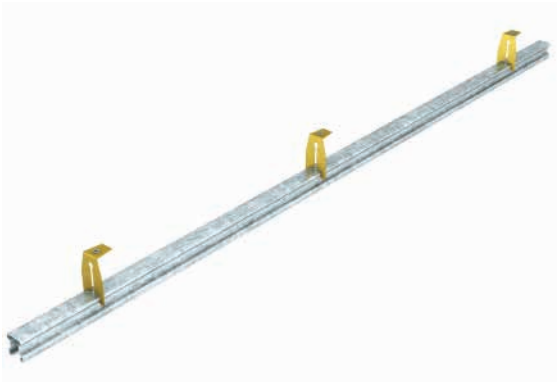

FIGURE B2.5.2.5(F): DIRECT FIX CLIP TO TCR

(7.4) Repeat the above, working back towards the perimeter wall.

(7.5) Once all clips are secured, check the TCR offset from the perimeter wall is in accordance with the design for a fixed or free end as appropriate.

(7.6) Ensure the TCR is not distorted due to misalignment of the fixing clips.

(7.7) When installing the following TCR there should be no more than a 10mm gap between abutting TCR.

Step 8: TCR Splice Joint

(8) For correct seismic installation, the TCR splice joint needs to be rigidly fixed to allow the seismic actions to be transferred back to the structure. The TCR splice joint is to be made as follows:

(8.1) Ensure there is no more than a 10mm gap between the ends of the TCR, and the TCR can be aligned without pulling or causing misalignment of the suspension assembly.

(8.2) Using a TCR joiner or off cut, place the joiner on top of the suspended TCR so they sit flat, top to top.

(8.3) Support the TCR and install 2/#10G self-drilling screws through the TCR bodies.

(8.4) Repeat step 8.3 for the adjacent side.

(8.5) Ensure all joints are staggered throughout the ceiling for stability, and to prevent progressive collapse of the ceiling in the event one suspension may be lost.

(8.6) The TCR spliced should be located not greater than 300mm from a suspension point.

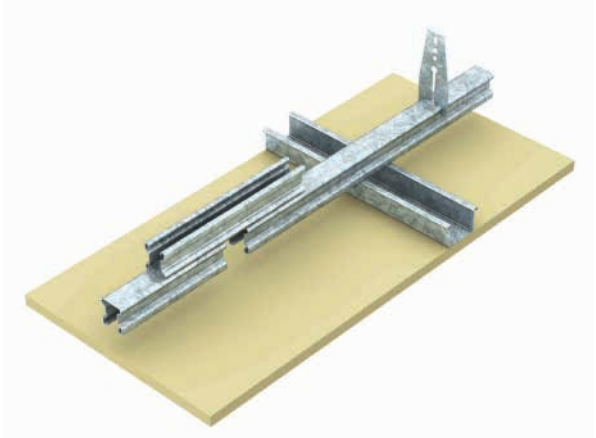

FIGURE B2.5.2.5(G): TCR SPLICE JOINT

Step 9: Fixing Furring Channel (FC)

(9) Once all the TCR are in position the furring channel can be installed as follows:

(9.1) Sit one end of the furring channel in the perimeter trim, and maintain the correct clearance as per the design for a fixed or free end as appropriate.

(9.2) Lock one side of the Rondo Interchange Clip 139 over the head of the furring channel.

(9.3) Gently squeeze the furring channel sides together to allow the interchange clip to roll over the furring channel head and lock into position.

(9.4) Align the interchange clip with the TCR previously installed such that it can be installed into the TCR without pulling or causing the suspension assembly to be misaligned. The interchange clip can be readily slid along the furring channel once the side of the furring channel are squeezed together.

Never use mechanical or other means to install these products. If you cannot assemble by hand, there is possibly something amiss.

(9.5) Bring the furring channel up into position and slide the interchange clip up into the TCR.

(9.6) Push upwards firmly, whilst supporting the TCR, ensuring both sides of the interchange clip engage with the TCR. This is evident by an audible "CLICK-CLACK" as the TCR opens and closes onto the interchange clip support legs.

(9.7) The Interchange Clip is to be fitted at each furring channel / TCR intersection point and the furring channels are to be installed in accordance with the design.



FIGURE B2.5.2.5(H): INSTALLING THE FC

(9.8) The Rondo design does not consider the ceiling linings, except in the determination of system weights, so it is important to also check the board manufacturer's recommendations are aligned with the Rondo design.

Notwithstanding this, at no time should the furring channel be spaced at more than 600mm centres unless specifically designed accordingly.

(9.9) When starting a new run of furring channels, start with a cut length of furring channel such that the furring channel splice joints are staggered throughout the ceiling area.

Step 10: FC Splice Joint

(10) For correct seismic installation, the furring channel splice joint needs to be rigidly fixed to allow the seismic actions to be transferred back to the structure. The furring channel splice joint is to be made as follows:

(10.1) At the furring channel splice joint, one end of the furring channels is notched to allow it to nest into the abutting furring channel so the furring channel needs to be positioned such that there will be a minimum of 100mm overlap between the two sections.

(10.2) Cut the lip back approximately 100mm from one end of the furring channel, and sit the cut end inside the abutting furring channel.

(10.3) Install an 2/#10G screw through each side of the nested furring channels.

(10.4) Ensure all joints are staggered throughout the ceiling for stability, and to prevent progressive collapse of the ceiling.

(10.5) The furring channel splice should be located not greater than 200mm from a TCR.

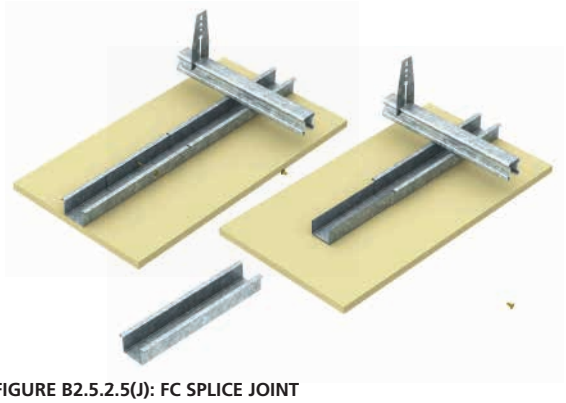

FIGURE B2.5.2.5(J): FC SPLICE JOINT

Step 11: Check The Final Levelling

(11) When all the ceiling grid is installed, the ceiling should be levelled using a string line, laser level or similar as appropriate.

(11.1) The Rondo suspension clips are either spring or threaded systems and can be adjusted and levelled by either squeezing the locking tabs and sliding the clips or adjusting the locking nut for the threaded systems.

(11.2) The ceiling level is to be set in accordance with the architectural plans.

Step 12: Installing Linings

(12) Install the ceiling linings as per the manufacturer's specifications.

For plasterboard, the long length of the board is to be installed perpendicular to the furring channels.

Step 13: Perimeter Finishes

(13) The ceiling perimeters shall be finished in accordance with the architectural specification and install appropriate perimeter trim as shown below.

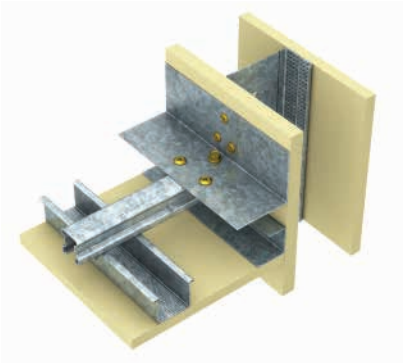

FIGURE B2.5.2.5(L): SQUARE SET FINISH

For the classic square set ceiling finish, the plasterboard should be terminated as close to the perimeter wall as possible, and the resulting joint set using either an internal corner bead or paper lined joint.

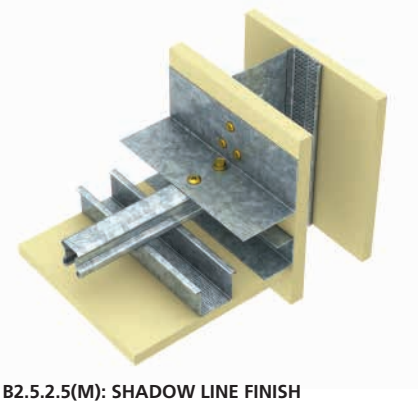

FIGURE B2.5.2.5(M): SHADOW LINE FINISH

For the shadow line ceiling finish, the plasterboard should be terminated approximately 10mm from the perimeter wall, and the resulting joint set a stopping angle appropriate for the board thickness.

This joint method is typically preferred as it allows for building movement without potentially cracking the joint.

The stopping angle is preferred as it allows the inter-storey drift to be accommodated without damaging the plasterboard edge.

B2.6

KEY-LOCK© RESIDENTIAL CEILING SYSTEMS

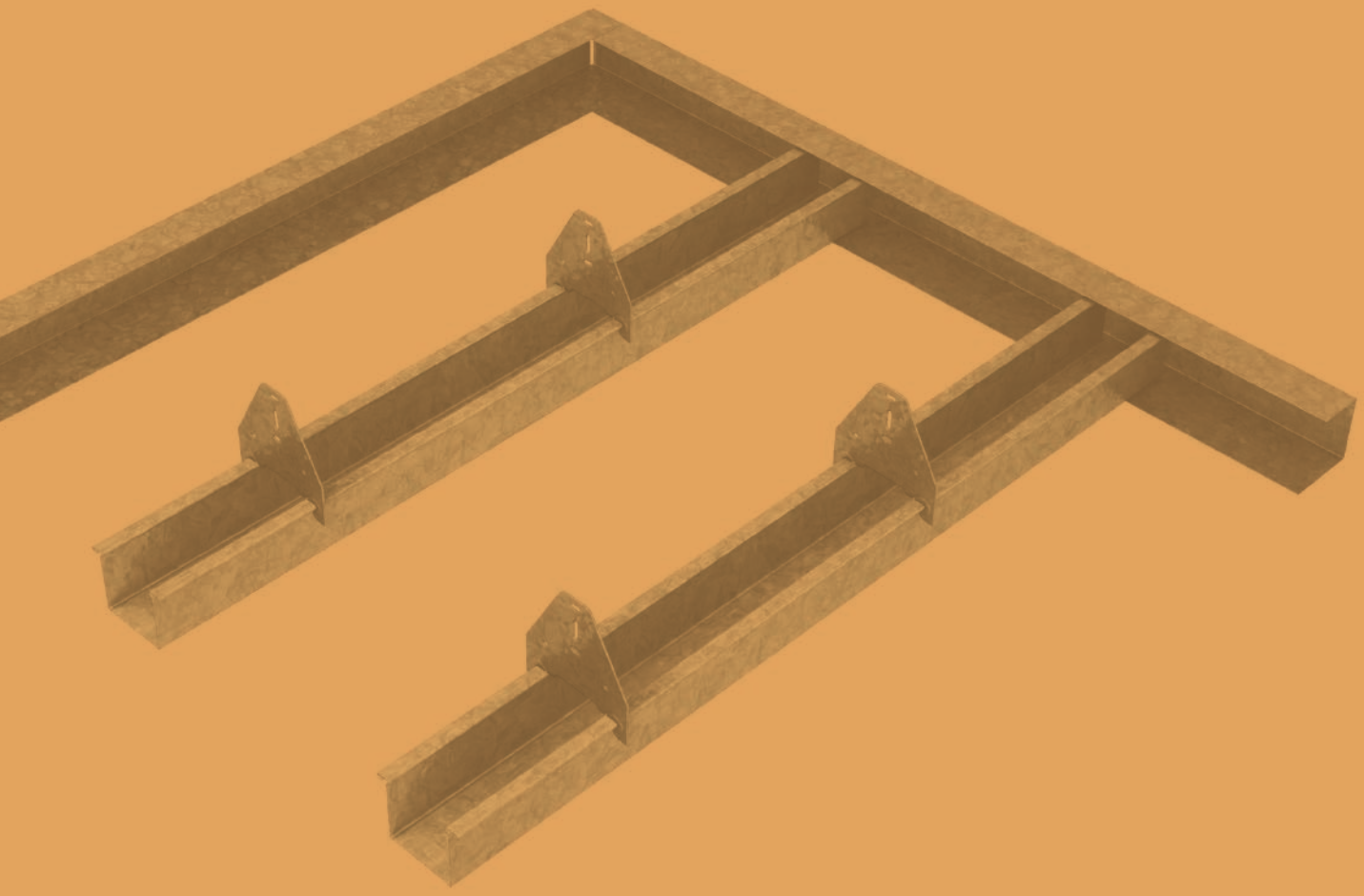

OTHER KEY-LOCK© SYSTEMS IN THIS SERIES:

B2.4 KEY-LOCK© SUSPENDED CEILING SYSTEMS
B2.6 KEY-LOCK© DIRECT FIXED CEILING SYSTEMS

B2.6 KEY-LOCK® RESIDENTIAL CEILING SYSTEMS

Rondo recommends that all ceilings in residential dwellings be battened out prior to installing the linings. We provide a range of battens suitable for internal ceiling applications even in high wind regions. Benefits of using Rondo ceiling battens are as follows:

- Helps to prevent ceiling linings cracking which can happen when lining boards are directly fixed to the structure without capacity to accommodate the expected building movement
- The fixing method for battens allows the ceiling to be levelled, to comply with the finished framing deviation limits specified in AS2589
- Acoustic mounts can be incorporated into the fixing of the ceiling battens to improve the acoustic performance of the ceiling, particularly against impact sound (refer to Rondo for more information)
- Expansion of steel and plasterboard is more closely matched than other substrates
- Can reduce call-back maintenance when compared to directly applying the linings to the substrate

Wind action on residential buildings is considered in section A3.4.7. Where the building geometric size is within the nominated in Figure A3.4.7(A) seismic design is not required for the building. The following information assumes the building form is within the limitations provided above and therefore seismic actions have not been considered for the residential ceiling systems herein.

B2.6.1 DIRECT FIX BRACKET/CLIP SELECTION

Ceiling battens installed using direct fix clips cannot be considered as providing lateral restraint to framing members or diaphragm action for racking forces. Separate and independent framing is required to accommodate these actions.

TABLE B2.6.1(A): DIRECT FIX BATTEN CLIP SELECTION

Substrate	Assembly	Direct Fix Clip (Part No)	Batten (Part No)	Suitable Plenum Depth (mm)		Adjustment (mm)
				Minimum	Maximum	
Steel / Timber		313	310	51	153	102
Steel / Timber	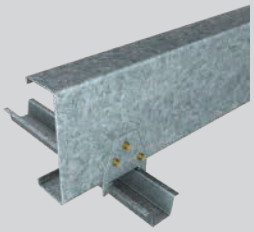	311D	310	51	57	7

FIXING DIRECT TO THE STRUCTURE

Ceiling battens can be fixed directly to the structural frame; however precautions should be taken to minimise the potential for cracking or other problems.

When directly fixed to the structural frame, some of the ceiling battens can provide lateral restraint to the structure to which they are attached, however this requires consideration of the exact fixing details and the structure. This has not been considered herein and should be discussed directly with your Rondo representative. Similarly, diaphragm action of the ceiling requires independent consideration.

The ceiling battens should be installed in the same direction throughout the entire ceiling area. Blocking or bridging should be used to support the battens should the structural frame change direction.

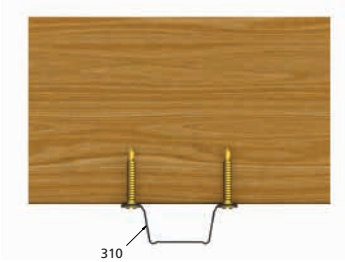

FIGURE B2.6.1(A): DIRECT FIXING TO TIMBER

When fixing battens directly to a timber substrate, the timber should be checked for compatibility with the galvanized coating per Table A6.5.2(B), and the fixings should be in accordance with Section A5.1.3.

The design capacity of screws in withdrawal from seasoned timber is given in Table B2.6.1(B) as follows:

TABLE B2.6.1(B): SCREW WITHDRAWAL CAPACITY

	Tension (ø N) - N			
	Timber Joint Group			
	JD1	JD2	JD3	JD4
#10G Screw x 30mm penetration	3528	2688	2088	1584
#10G Screw x 45mm penetration	5292	4032	3132	2376

Care should be taken when using fasteners in withdrawal into timber as the capacity can vary depending on environmental conditions in which they are installed.

TABLE B2.6.1(C):SCREW FASTENER RECOMMENDATIONS FOR DIFFERENT SUBSTRATES

Batten Part No	SCREW LENGTH & SIZE		
	STEEL	HARDWOOD	SOFTWOOD
310	Wafer Head 10 x 24 x 25 Drill Point	Pan Head 8 x 25 Type 17 10 x 25 Water	Wafer Head 10 x 45 Type 17

The design capacity of nails in withdrawal from seasoned timber is given in Table B2.6.1(D) as follows:

TABLE B2.6.1(D): NAILS WITHDRAWAL CAPACITY

	Tension (ø N) - N			
	Timber Joint Group			
	JD1	JD2	JD3	JD4
2.8mm dia x 30mm penetration	768	528	336	223
2.8mm dia x 45mm penetration	1152	792	504	334

TABLE B2.6.1(E): NAIL FASTENER RECOMMENDATIONS

Batten Part No	NAIL LENGTH & DIAMETER					
	HARDWOOD			SOFTWOOD		
	Length (mm)	DIA (mm)	TYPE	Length (mm)	DIA (mm)	TYPE
310	30	2.8	Angular Ring Shanked	40	2.8	Angular Ring Shanked

B2.6.2 DESIGN DATA

Table B2.6.2(B) below provides the maximum span and spacing details for the Rondo #310 Ceiling Batten for internal applications in the non-cyclonic wind regions N1 to N6 inclusive.

TABLE B2.6.2(B): RONDO #310 BATTEN DIRECT FIX SPAN TABLES

Ultimate Wind Pressure (kPa)	Lining		Bracket Spacing or Batten Span (mm) (BTS)			
	Description	Weight (kg/m²)	311D/313 DIRECT FIX CLIP			
			Single Span		Continuous Span	
			450 (BC)	600 (BC)	450 (BC)	600 (BC)
0.25 kPa	1/10mm or 1/13mm Standard Plasterboard	9	1965	1785	2430	2205
	1/13mm Plasterboad (Other)	11.5	1915	1740	2365	2055*
	Unknown Lining 1	13	1885	1710	2330	1970*
	Unknown Lining 2	16	1830	1665	2265	1815*
0.50 kPa	1/10mm or 1/13mm Standard Plasterboard	9	1665	1510	1770*	1325*
	1/13mm Plasterboad (Other)	11.5	1635	1485	1690*	1265*
	Unknown Lining 1	13	1620	1475	1645*	1235*
	Unknown Lining 2	16	1590	1445	1565*	1170*
0.75 kPa	1/10mm or 1/13mm Standard Plasterboard	9	1490	1355	1265*	945*
	1/13mm Plasterboad (Other)	11.5	1475	1340	1220*	915*
	Unknown Lining 1	13	1460	1330	1200*	900*
	Unknown Lining 2	16	1445	1310	1155*	865*
1.00 kPa	1/10mm or 1/13mm Standard Plasterboard	9	1370	1245	980*	735*
	1/13mm Plasterboad (Other)	11.5	1360	1235	955*	715*
	Unknown Lining 1	13	1350	1230	940*	705*
	Unknown Lining 2	16	1335	1215	915*	685*

Notes:

1. *Contact Engineering Design Services for any other lining configuration listed above.*
2. *Check maximum batten channel spacing with board manufacturer. It is recommended to choose 450mm centres for 10mm plasterboard.*
3. *Adopted net pressure coefficient C_{pn} =+-0.3.*
4. *Serviceability limit state deflection is limited to the following.*
   L/200 for $G_{max}+W_{ser,dn}$ and $0.9G_{min}+W_{ser,up}$
   L/360 for G_{max}
5. *Serviceability design wind pressures have been factored from the Ultimate limit state pressures nominated, in accordance with AS4055.*
6. ** = Span is controlled by the connection capacity of the nominated clip.*
7. *BC = Batten Centres*

B2.6.3(A): BATTEN DIRECT FIX WITH CLIP PERIMETER FIXED CEILING

This system is similar to the B2.5.1.3(A). Determining maximum room size, system layout, and system selection process from B2.5.1(A) is also similar for this system.

For a fixed perimeter connection, only the 559 angle is utilized; wall track is not an option for batten direct-fix ceilings. Refer to Table B2.5.1.2(D) for maximum batten length.

B2.6.3(B): BATTEN DIRECT FIX WITH CLIP SEISMC JOINTED CEILING

This system is similar to the B2.5.1.3(B). Determining max room size, system layout and system selection process from B2.5.1(B) is also similar for this system.

B2.6.4 STANDARD DETAILS

TABLE B2.6.3(A): STANDARD RESIDENTIAL WALL TRACK DETAILS FOR BATTENS DIRECTLY FIXED TO STRUCTURE

WALL TRACK FIXING TO WALLS		
RWT(a) - Stud Wall	*RWT(b) - Timber Wall*	*RWT(c) - Concrete Wall*
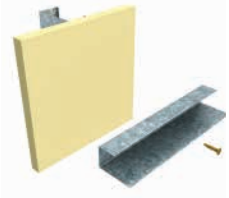	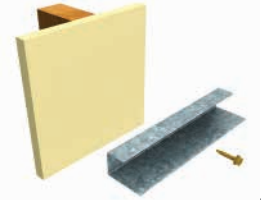	
142/340 - 1/#8G Screw	*142/340 - 1/12G Type 17 Wood screw*	*142/340 - 1/HUS3-H6*

B2.6.4 STANDARD DETAILS

TABLE B2.6.3(B): STANDARD DIRECT FIX BRACKET DETAILS

BATTEN DIRECT FIX BRACKET TO PRIMARY STRUCTURE		
RDFC(a) 	*RDFC(b)* 	*RDFC(c)* 
314, 2/#10G Type 17 - Wood Screws	*305, 2/#10G - Screws*	*390, 2/#10G Type 17 - Wood Screws*
RDFC(d) 	*RDFC(e)* 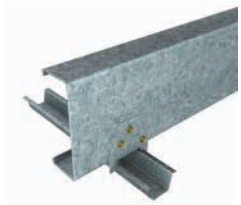	
313, 2/#10G Type 17 - Wood Screws	*311D, 310, 2/#10G Screws*	

TABLE B2.6.3(C): STANDARD PERIMETER FINISH DETAILS

FIXED PERIMETER CONNECTIONS -SQUARE SET
FR-Ba-Free Batten Connection 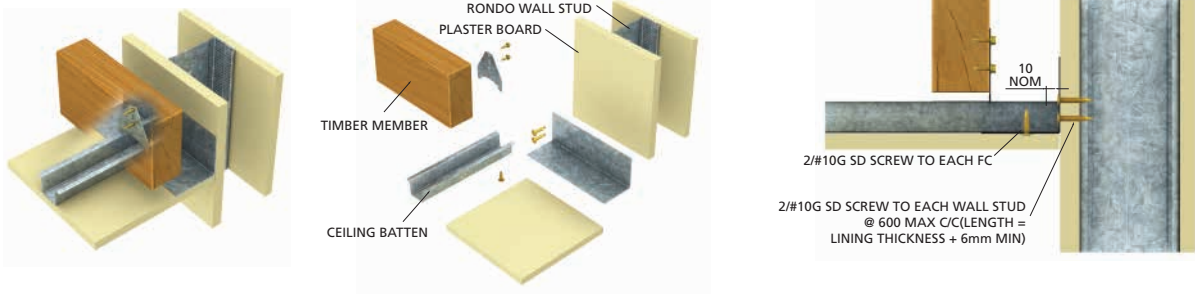
559/141 310 - 2/#10G SCrew, 2/#10G Screw

FIXED PERIMETER CONNECTIONS - SHADOWLINE
FR-Ba-Free Batten Connection 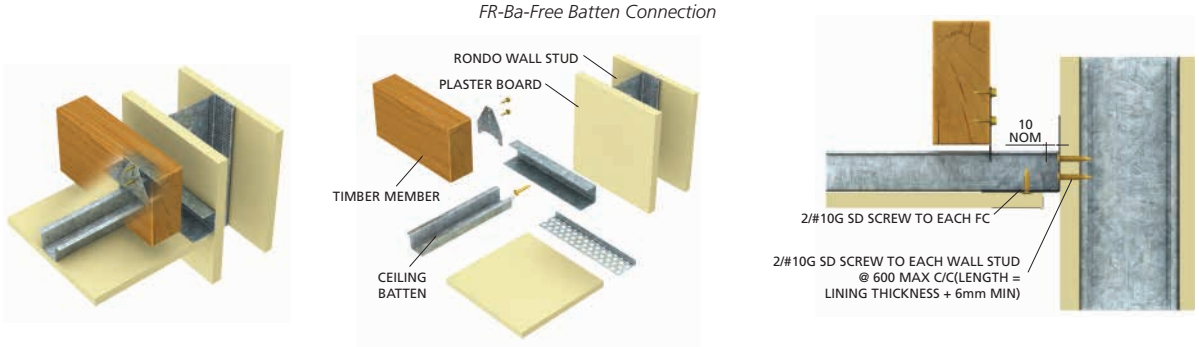
559/141 310 - 2/#10G SCrew, 2/#10G Screw

TABLE B2.6.3(C): STANDARD PERIMETER FINISH DETAILS (CONTINUED)

FREE PERIMETER CONNECTIONS -SQUARE SET

FR-Ba-Free Batten Connection

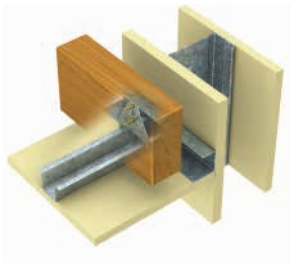

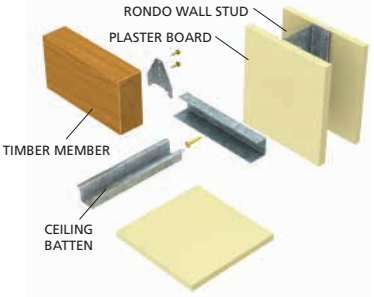

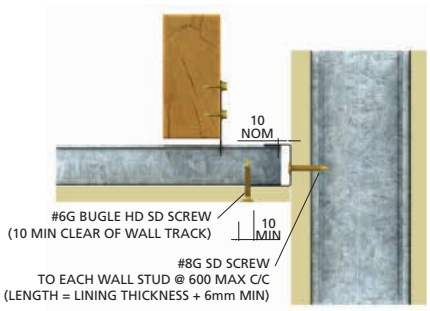

142/340 310 - 1/#8G Screw, 1/#6G Screw

FREE PERIMETER CONNECTIONS - SHADOWLINE

FR-Ba-Free Batten Connection

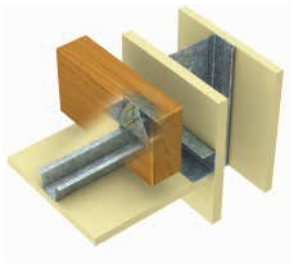

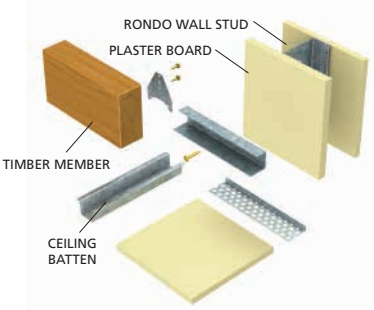

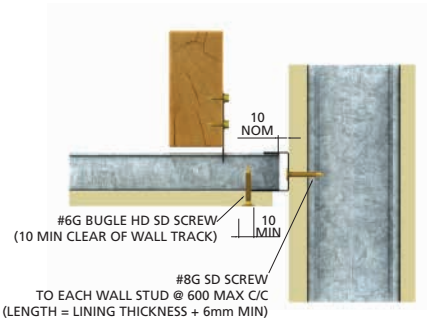

142/340 310 - 1/#8G Screw, 1/#6G Screw

B2.6.5 INSTALLATION

Figure B2.6.4(A) below provides an overview of the installation procedure for a typical residential, direct fixed ceiling. This ia a general guide only.

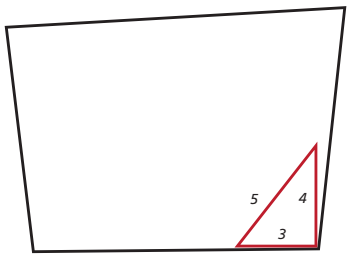

1. Check room squareness

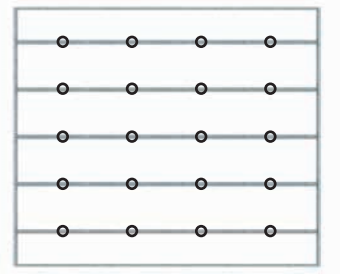

2. Plan the ceiling grid

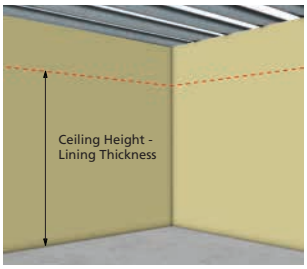

3. Mark ceiling height around perimeter wall



4. Install Wall Track

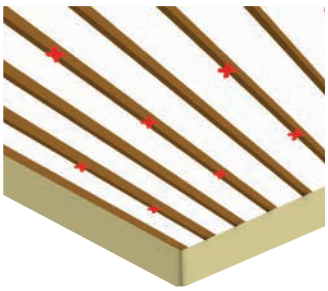

5. Mark Direct Fix Clip Location



6. Install Direct Fix Clip



7. Install Ceiling Batten



8. Batten Splice Joints



9. Check Final Levelling

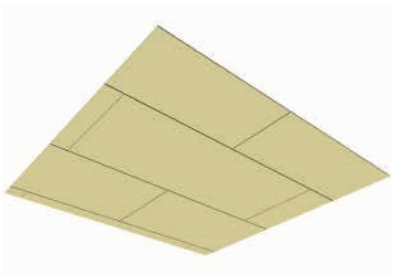

10. Perimeter Finishes and Install Linings

INSTALLATION PROCEDURE

Step 1: Preliminaries

(1) The ceiling area should be checked to ensure it ready to proceed with installation including, but not limited to:

(1.1) the building's cladding is functionally completed, and the area is weatherproof.

(1.2) the walls are square, parallel and plumb and have been constructed to plan.

(1.3) visually check the structure that will support the ceiling grid to ensure it is complete and to assess suspension points.

Step 2: Plan The Ceiling Grid

(2) Based on batten selection and edge distance plan the ceiling grid.

(2.1) Check for critical lighting conditions based on the batten and lining direction.

(2.2) Ensure first fixing point and Battens are correctly spaced from the perimeter walls.

(2.3) Ensure the batten is running perpendicular to the supporting structure, and the support spacing is consistent with the ceiling design.

Never run the ceiling battens parallel with the roof trusses, floor joists or other supporting members.

Step 3: Mark Ceiling Height Around The Perimeter Wall

(3) Mark the finished ceiling height on the wall, as specified on the Architectural plans.

(3.1) Transfer this set point to all other walls using a laser or other acceptable means.

Step 4: Install Wall Track

(4) Install the wall track as follows:

(4.1) Ensure the wall track is consistent with the ceiling design.

(4.2) Cutting the wall track should be minimised as much as possible.

(4.3) Fix the wall track to the framing members of the perimeter walls, aligning the wall track with the set out marked previously. Refer Table B2.6.5(A) to (C) for standard details and additional information.

(4.4) Wall track fixings to be as follows:

a. to concrete, refer section A5.1.1.

b. to structural steel, refer section A5.1.2.

c. to timber, refer section A5.1.3.

(4.5) The first fixing to the wall track should be no more than 100mm from the end and thereafter , the fixings need to be spaced at not more than 600mm centres.



FIGURE B2.6.4(B): WALL TRACK TO CONCRETE WALL

Step 5: Mark Fixing Clip Position

(5) Mark the direct fixing clip position in the specified grid pattern.

(5.1) Ensure the suspension set out matches to the design span and spacing.

(5.2) Ensure the suspension set out is straight, consistent and uniform throughout the ceiling area.

(5.3) Allow for bridging or blocking where the structural frame changes direction.

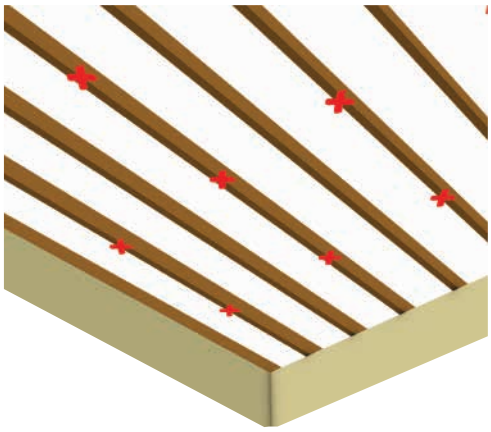

FIGURE B2.6.4(C): DIRECT FIX CLIP SET OUT

Step 6: Install Direct Fixing Clips

(6) Select the direct fix clip consistent with the structure as follows:

(6.1) To steel purlins or the like, select the direct fix clip from Table B2.6.1(A) as appropriate. For fixings to steel refer section A5.1.2.

(6.2) When fixing to roof purlins, never suspend the ceiling from the lip of the purlin as this introduces torsion into the purlin and could potentially cause premature failure.



FIGURE B2.6.4(D) DIRECT FIX CLIP TO TIMBER

(6.3) To timber, select the direct fix clip from Table B2.6.1(A) as appropriate. For fixings to timber refer section A5.1.3.

Step 7: Install Ceiling Batten

(7) Once all the direct fix clips are in position the ceiling batten can be installed as follows:

(7.1) Sit one end of the ceiling batten in the perimeter trim, and maintain the correct clearance as per the design for a fixed or free end as appropriate.

(7.2) Lock one side of the ceiling batten into the direct fix clip.

(7.3) Gently squeeze the ceiling batten sides together and roll it into the opposite side of the clip.

Never use mechanical or other means to install these products. If you cannot assemble by hand, there is possibly something amiss.

(7.4) Visually check to see the ceiling batten is fully engaged with the clip.



FIGURE B2.6.4(E): CHECK BATTEN IS ENGAGED IN CLIP

(7.5) When starting a new run of ceiling batten, start with a cut length such that the ceiling batten splice joints are staggered throughout the ceiling area.

Step 8: Splice Joint

(8) For correct installation, the ceiling batten splice joint needs to be rigidly fixed. The ceiling batten splice joint is to be made as follows:

(8.1) At the ceiling batten splice joint, one end of the batten is notched to allow it to nest into the abutting batten so there should be a minimum of 50mm overlap between the two sections.

(8.2) Cut the batten head back for approximately 50mm from one end and sit the cut end inside the abutting batten.

(8.3) Install 2/#8G screw through each side of the nested sections.

(8.4) Ensure all joints are staggered throughout the ceiling for stability, and to prevent progressive collapse of the ceiling.

(8.5) The ceiling batten splice should be located not greater than 200mm from a support location.

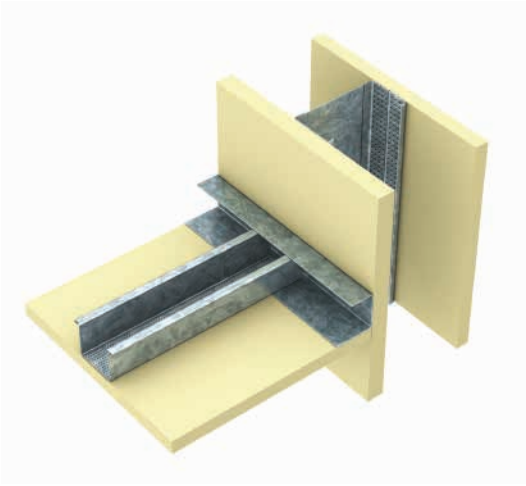

FIGURE B2.6.4(F): BATTEN SPLICE

Step 9: Check The Final Levelling

(9) When all the ceiling batten are installed, the ceiling should be levelled using a string line, laser level or similar as appropriate.

(9.1) The ceiling level is to be set in accordance with the architectural plans.

Step 10: Perimeter Finishes and Install Linings

(10) Install the ceiling linings as per the manufacturer's specifications.

For plasterboard, the long length of the board is to be installed perpendicular to the ceiling batten.

The ceiling perimeters shall be finished in accordance with the architectural specification and install appropriate perimeter trim as shown below.

For the classic square set ceiling finish, the plasterboard should be terminated as close to the perimeter wall as possible, and the resulting joint set using either an internal corner bead or paper lined joint.

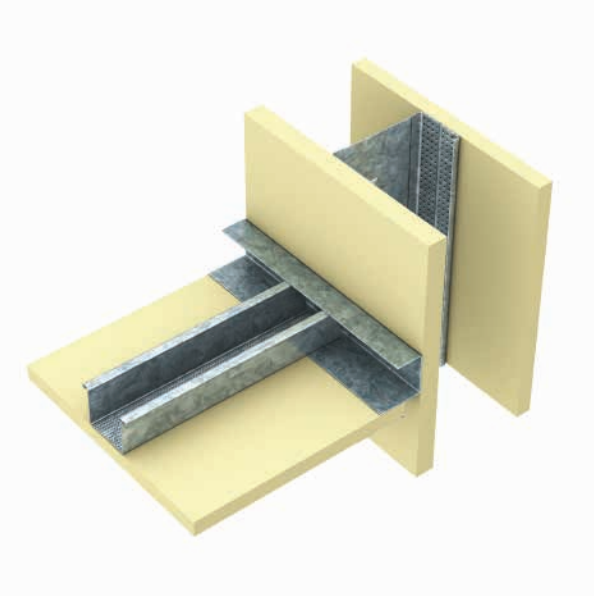

FIGURE B2.6.4(G): SHADOW LINE CEILING JUNCTION

For the shadow line ceiling finish, the plasterboard should be terminated approximately 10mm from the perimeter wall, and the resulting joint set a stopping angle appropriate for the board thickness.

This joint method is typically preferred as it allows for building movement without potentially cracking the joint.

The stopping angle is preferred as it allows the inter-storey drift to be accommodated without impacting the perimter.

RONDO®

we're behind the best buildings

rondo.co.nz